The invisible hand for a more convenient world
Autonics sensors & controllers

SELECTION GUIDE

Ver. 13

Autonics
Sensors & Controllers

CE c UL us ISO-9001 AB28

www.autonics.com

Cost Effective IA solutions?

Autonics is the Answer

Sensors

Photoelectric Sensors
Fiber Optic Sensors
Door / Door Side Sensors
Area Sensors
Proximity Sensors
Pressure Sensors
Rotary Encoders

Controllers

Temperature Controllers
Temp. /Humidity Transducers
Power Controllers
Counters
Timers
Panel Meters
Pulse(Rate) Meters
Display Units
Sensor Controllers
Switching Power Supplies
Graphic/Logic Panels
Field Network Devices

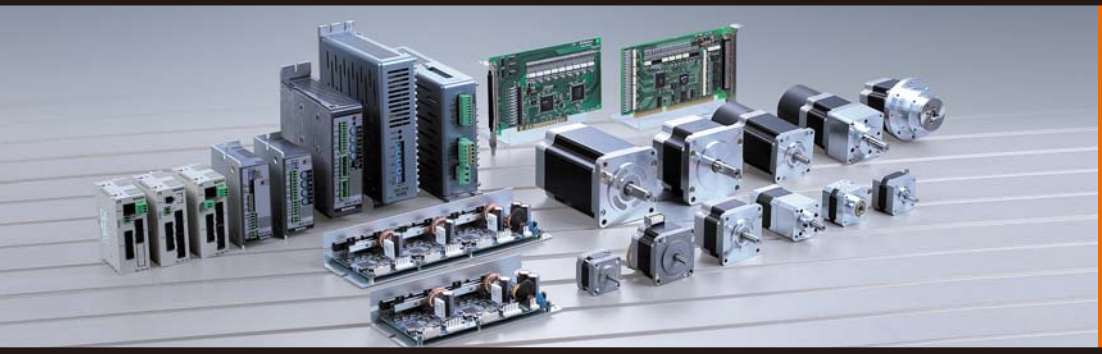

Step Motors

2, 5-Phase Step Motors
2, 5-Phase Step Motor Drivers
Motion Controllers

Control switches

Push button switches
Selector switches
Emergency switches
Pilot lamps
Switch accessories
Buzzers
Sockets
Digital switches
Interface terminals

※Not included in this guide.
Refer to the control switch catalogue.

Global partner for industrial automation, Autonics

Quality
Reliability
Diversity and Affordable

Autonics is a leading company of Sensors & Controllers in Korea. 6,000 detailed items, high quality, reliability and affordable price make them the most cost effective and best selling products in Korea and widely marketed in more than 100 countries.
If you are looking for more cost effective sensors and controllers, Autonics is the answer.

CE c UL us ISO-9001 PG AB28

Visit www.autonics.com **for more information, Email to** sales@autonics.com **for inquiries**

Standard type PID Control Temp. Controller

TK Series

New

- High accuracy controlling with 50ms sampling speed
- Communication function
- Dramatically increased visibility using wide display and high luminance LED
- Heating/Cooling and Automatic/Manual control
- SSR/Current output selectable
- SSRP output (standard/phase/cycle control selectable)
- Heater burn-out alarm (C.T input)
- Space saving mounting with compact design
  : downsized by 38% in depth(60mm)

Multi-channel Module Type Temp. Controller

TM Series

- No communication and power supply for expansion modules required using side connectors
  : max. 31 units (124 channels/62 channels) expandable
- Multi channel (4 channel/2 channel) I/O available with one unit
- Realization of high speed sampling
  (4 channel : 100ms/2 channe : 50ms)
- Heating/Cooling controlling function embodied together
- Parameter setting with USB cable and RS485 communication (Modbus RTU)
- Easy maintenance via connector type connection

Economical PID Dual Display Type Temp. Controller

TCN Series

(Acquiring certification)

New

- Improved convenience with dual display(SV/PV)
- Realizing 100ms high speed sampling
- SSRP output and relay output embodied together
  : SSRP output makes phase control and cycle control possible
- Dramatically increased visibility using wide display and high luminance LED
- Space saving mounting with compact design
  : downsized by 38% in depth(60mm)
- Various sensor input types and wide indication ranges

Economical PID Control Temp. Controller

TC Series

- Realizing 100ms high speed sampling
- Relay output and SSRP output embodied together
  : SSRP output makes phase control and cycle control possible
- Dramatically increased visibility using wide display and high luminance LED
- Space saving mounting with compact design
  : downsized by 38% in depth(60mm)
- PV/SV deviation indicatable

Digital Switch PID Control Temp. Controller

TD Series

- Digital switch application to PID control temp. controller
- Realizing 100ms high-speed sampling
- SSR drive output/Relay output and SSR drive output/ Current output selectable
- Improved visibility with wide display and high luminance LED
- Space saving mounting with compact design
  : downsized by 38% in depth(60mm)

Analog Setting Non-Indicating Type PID Control Temp. Controller

TA Series

New

- Improved control performance with built-in microcomputer
- Adopting new Auto-tuning PID control algorithm
  : Selectable ON/OFF, PID control
  (with the external slide S/W)
  : PID control using self-tuning function
- Easy to check controlling status with deviation indicating lamp
  : Deviation LED(red, green), output LED(red) indication
- Dial setting output OFF function
- Sensor broken display function

Simple Operation Type Temp. Controller

TC3YF/TC3YT Series

TC3YF Series

- Available with up to 3 outputs
  : Compressor, Defrost, and Evaporation(fan)
- Auto/Manual defrost function
- Various delay functions for optimal cooling control
  : Compressor start-up delay, re-operation delay, Minimum ON time, defrost-end delay and evaporation-fan operation delay
- Operation cycle setting available for compressor protection in case of error

TC3YT Series

- Simple and economical type
- ON/OFF and Proportional control
- Control output : Relay(250VAC 3A 1c or 250VAC 16A 1c)
- Input sensor : Thermocouple(J, K), RTD(Pt100Ω)
- Input correction function
- Finger safety type of terminal

Heat Sink Integrated Type SSR(Solid State Relays)

SRH1 Series

New

- Superior dielectric strength : 4,000VAC
- Improved reliability by maximizing heat protection efficiency with heat sink integrated design and ceramic board
- Various mounting types available (DIN rail, panel front)
- Zero Cross Turn-on/Random Turn-on supported

LCD Type Compact Counter/ Timer/Pulse Meter

L□N Series

Counter (LA8N Series) | Timer (LE8N Series) | Speed/RPM/Pulse meter (LR5N Series)

- Long life & replaceable internal lithium battery
  (Battery life cycle : LA8N – 7 yrs / LE8N – 10 yrs / LR5N – 3yrs)
- 7 segment LCD display (LA8N / LE8N : 8 digit, LR5N : 5 digit)
- Screw Terminal type (Terminal protection cover)
- Protection structure IP66 (Front panel only)
- Signal input type
  - No-voltage input : Use reliable contacts enough to flow 5㎂ of current.
  - Universal voltage input : "H" : 24-240VAC / 6-240VDC
    "L" : 0-2.4VAC / 0-2.4VDC
  (Universal voltage input type is not available for LR5N.)

Programmable Counters/Timers

CT Series

- Supports RS485 communication (Modbus RTU) function
  : Parameter setting and monitoring via PC
  : PC loader program 'DAQMaster' provided free of charge
- Increased contact capacity of load to 5A(Previous model: 3A) (CTS, CTM)
- Sets one-shot output time from 0.01to 99.99sec. per 10ms
- Diverse input/output modes available

[Counter]
- Available to set 6 digit prescale value (0.00001 to 999999) (4 digit: 0.001 to 9999)
- Added BATCH counter indication mode for CT6M-1P and CT6M-2P
- Available to set Count Start Point (Initial value)

[Timer]
- Memory backup function (For indicator)
- More diverse time range
  (6 Digit : 999.99s / 9999m59 / 99999.9h, 4 Digit : 9.999s)
- Available to set "0"

7" True Color PLC Function in Corporated Touch Screen Logic Panels/Graphic Touch Panels

New

Logic panels

LP-S070 Series

- Supports input 16 points/ output 16 point basically.
- Position control function
  (Max. 100KHz pulse 2 contact concurrent output)
- Various device support
  (including 10K word and data device 10K device)
- Large memory capacity
  Program memory : 8,000 Step, Drawing memory :16MB)

※ Other features are the same with GP-S070's.

Graphic touch panels

GP-S070 Series

- 16,777,216(24bit) color with 7" wide TFT LCD screen
- Analog touch type monitor
- Data logger function: various data collect and back-up support for controllers
- Various image library support
- Synchronous monitoring for Multi address / channel
- Support multi font
  (providing various bitmap and widows vector font)
- Support multi communication interface
  (USB Host/Device, RS232/RS485, Ethernet)

Ultra Slim Type Photoelectric Sensors

CE

BTF Series

New

- Flexible mounting possible in narrow space with ultra slim body
- Lighting spot checking available with red LED beam
- BGS reflective type features
  : Hardly affected by background
  : Advanced sensing performance by minimizing the influences of object color and materials.
- Detecting up to Ø0.2mm small object
- Improved visibility with safety indicator(green) and operation indicator(red)
- Reverse polarity protection, Output short-circuit protection circuit
- Protection structure IP67 (IEC standard)

Compact and Amplifier built-in Photoelectric Sensors

CE

BJ Series

Connector type

- High performance lens : Through-beam 15M, Polarized retro-reflective 3M, Diffuse reflective 1M
- Adjacent installations possible with auto mutual interference prevention function
- No effects of background object with Background Suppress(B.G.S) function(BGS reflective type)
- Stable sensing to minimize error range regardless of color and material of sensing objects(BGS reflective type)
- Stable detection for transparent objects(LCD, PDP, glass etc) by BJG30-DDT
- Micro-spot type(BJN)
- High accuracy sensing for minute object(BJN)
- Compact size : W20 x L10.6 x H32mm

Digital Indicating Type Fiber Optic Sensors

CE

BF5 Series

- Dual-display for light incident level and setting value (BF5R-D)
- Minute object sensing available with 1/10,000 high resolution
- High speed sensing of moving objects (20,000 times per sec.)
- 4 types of response speed setting mode
  : Ultra Fast mode(50㎲), Fast mode(150㎲), Standard mode(500㎲), Long distance mode(4ms)
- Long lasting amplifier using APC circuit regardless of element's life degradation or temperature change

Cylindrical/Rectangular Proximity Sensors

CE

PR/PRD/PSN Series

- World class noise resistance by adopting dedicated IC.
- Realizing 1.5 to 2 times long distance sensing performance (PRD Series)
- Long life cycle, High reliability and Easy operation
- Protection structure IP 67
- Reverse power polarity, surge, overcurrent protection
- Replacer for micro switches and limit switches

Slim Type
Area Sensor/Picking Sensor
BW/BWP/BWPK Series

CE

■ BW Series
- Increased sensing stability by minimizing the non sensing area
- Long sensing distance up to 7m

■ BWP Series
- 13mm slim body with fresnel lens.
- Adoption of plastic (PC/ABS) injection case

■ BWPK Series
- Slim body (W30×H140×L9.9mm)
- Plastic injection case
- Wide range of sensing distance (0.1 to 3m, 0.05 to 1m)
- Mutual interference prevention (FREQ A/B)
- Picking indicator included

Shaft/Flange Type(Φ58mm)
Rotary Encoders
E58/EP58 Series

CE

- Diverse appearance supported
  - Shaft/ flange type
    : Shaft clamping type, Shaft synchro type, Hollow shaft built-in type and Hollow shaft type
    (in case of hollow shaft type, incremental type only)
  - Wiring
    : Axial/ radial connector type, Cable outgoing connector type and Cable outgoing type
    (in case of hollow shaft type, axial cable outgoing type only)
- Maximizing user's convenience with front nut mounting style design

□24mm/□42mm/□60mm/□85mm
5 Phase Stepping Motors
AK/AHK Series

CE

- High speed, accuracy and torque
- Pentagon & Standard connection type
- Various types
  : Shaft, Hollow shaft, Brake, Geared, Geared-Brake, Rotary actuator, Rotary actuator-Brake
- Various frame size : 24, 42, 60, 85mm
- Rated current : 0.75, 1.4, 2.8A/phase

1/250 High Resolution
5 Phase Micro Stepping Drivers
MD5 Series

CE c UL us
(Except for MD5-HD14, ND14)

- Bipolar constant current pentagon drive type
- Max. 250 divisions(Except for MD5-ND14)
  (0.00288˚per pulse controllable - 5 phase stepping motor)
- Available low-speed revolution and super-precision control with a micro-step drive.
- Auto current down, self test, user's run/stop current setting, zero point excitation output provided

Modbus Sensor Connect Type Digital Remote I/O

CE

ARD Series

New

- Auto communication speed recognition
  : The unit enables to recognize communication speed automatically when connecting with master unit
- Network power voltage monitoring
  : If PV is lower than setting value, the unit enables to receive abnormal flag for network power voltage monitoring as Explicit message
- Single byte I/O : Reads / Writes on single byte
- Multi-byte I/O : Reads / Writes on several bytes
- Reading the number of expansion units
  : Reads the number of connected expansion units
- Reading unit specification
  : Read the specification of connected units
- Additional expansion units
  : Available to connect expansion units up to 7

100mm Hybrid Paper Type Recorder

CE c UL us

KRN100 Series

New

- Combines functions of paper recorder and paperless recorder
- Enables to print the saved data of inner memory when run out of recording paper (Data logger function)
- Inner data backup with USB memory
- Supports several communication(RS485, Ethernet) to transfer real time data

KONICS Products

Highly Durable & Compatible

CE

Autonics I/O Terminal Blocks

New

Interface Terminal Block AFS Series

Ideal for connector type PLC and dedicated controllers

Common Terminal Block ACS Series

No Jumper bars required due to built-in PCB common

Sensor Connector Terminal Block AFE Series

Realizing simple wiring work and saving time using sensor connector

Relay Terminal Block ABS Series

Ideal solution to drive diverse loads using PLC output signals

INDEX

Photoelectric Sensors	01
Fiber Optic Sensors	18
Door/Door Side/Area Sensors	29
Proximity Sensors	37
Pressure Sensors	55
Rotary Encoders	59
Temperature Controllers	91
Temperature/Humidity Transducers	115
SSR/Power Controllers	117
Thermocouples & RTD	119
Counters/Timers	121
Timers	127
Panel Meters	132
Tacho/Speed/Pulse Meters	142
Display Units	146
Sensor Controller/Power Supplies	147
Stepping Motors/Drivers/ Motion Controllers	150
Graphic Panels	163
Digital Remote I/O	169
Communication Converter	173
I/O Terminal Blocks/ I/O Cables	175
KONICS Products Recorders/Indicators/Converters/ Power Supply Units/Thyristor Units/ Pressure Transmitters/Temp. Transmitters	182

Photoelectric sensor

▣Ordering information

BEN 10 M – T F R □ □ – □ □ – P

NPN/PNP	P	PNP Open collector output
	No mark	NPN Open collector output
Connection type	No mark	Outgoing cable type
	C	Connector type
Timer	T	Built-in Timer
	No mark	Standard type
Reflective/Narrow beam type	No mark	Reflective type(Diffuse type)
	N	Narrow beam type(BR, BRP series only)
Emitter/Receiver	1	Emitter
	2	Receiver
Control output	R	Contact output(Relay)
	T	Solid-state output(Transistor)
Power Supply	D	DC power
	F	Power supply built-in
	S	Adjuster included(BUP series only)
Sensing type	D	Diffuse reflective type
	M	Retroreflective type
	P	Retroreflective with polarizing filter
	T	Through-beam type
	Number	Sensing distance(BUP series only)
Sensing distance unit	M	Sensing distance unit : m
	No mark	Sensing distance unit : mm
Sensing distance	Number	Sensing distance
Item	BX	Photoelectic sensor series
	BEN	
	BA	
	★ BPS	
	★ BM/BMS	
	★ BR/BRP	
	★ BUP	
	★ BY/BYS	
	BYD	

★ 'S' represents lateral sensing type.
'P' represents plastic case type.

BJ N 50 □ – N D T □ □ – □ – P

NPN/PNP	P	PNP Open collector output
	No mark	NPN Open collector output
Connection type	No mark	Outgoing cable type
	C	Connector type
Emitter/Receiver	1	Emitter
	2	Receiver
Operation mode	L	Light ON
	D	Dark ON
	No mark	Mode switching
Control output	T	Solid-state output(Transistor)
Power supply	D	DC power
Sensing type	D	Diffuse reflective type
	P	Retroreflective with polarizing filter
	T	Through-beam type
	N	Narrow beam reflective type
	B	BGS reflective type
Sensing distance unit	M	Sensing distance unit : m
	No mark	Sensing distance unit : mm
Sensing distance	Number	Sensing distance
Feature (BJ series)	No mark	Common
	N	Micro spot
Feature (BT series)	G	Transparent sensing
	F	Ultra-slim
Item	BJ	Photoelectic sensor series
	BT	

※□ This information is intended for product management of transmitted type models.(No need to refer when selecting a model)
※When choosing a model, please check the specification first.
※There is no micro photo sensor(BS5 Series) in ordering information.

Compact and long sensing distance type photoelectric sensor(BJ Series)

▣Specifications

Model								
	NPN open collector output	BJ15M-TDT BJ15M-TDT-C	BJ10M-TDT BJ10M-TDT-C	BJ7M-TDT	BJ3M-PDT BJ3M-PDT-C	BJ1M-DDT BJ1M-DDT-C	BJ300-DDT BJ300-DDT-C	BJ100-DDT BJ100-DDT-C
	PNP open collector output	BJ15M-TDT-P BJ15M-TDT-C-P	BJ10M-TDT-P BJ10M-TDT-C-P	BJ7M-TDT-P	BJ3M-PDT-P BJ3M-PDT-C-P	BJ1M-DDT-P BJ1M-DDT-C-P	BJ300-DDT-P BJ300-DDT-C-P	BJ100-DDT-P BJ100-DDT-C-P
Appearances & Dimensions		CE [W10.6×H32×L20mm] Connector type						
Sensing type		Through-beam			Polarized retroreflective	Diffuse reflective		
Sensing distance		0 to 15m	0 to 10m	0 to 7m	(※1)0.1 to 3m (MS-2A)	0 to 1m (Non-glossy white paper 300×300mm)	0 to 300mm (Non-glossy white paper 100×100mm)	0 to 100mm (Non-glossy white paper 100×100mm)
Sensing target		Opaque material over ϕ12mm		Opaque material over ϕ8mm	Opaque material over ϕ7.5mm	Translucent, opaque materials		
Hysteresis		———				Max. 20% at rated setting distance		
Response time		Max. 1ms						
Power supply		12-24VDC ±10%(Ripple P-P : Max.10%)						
Current consumption		Emitter/Receiver : Max. 20mA			Max. 30mA			
Light source		Infrared LED (850nm)	Red LED (660nm)	Red LED (650nm)	Red LED (660nm)	Infrared LED (850nm)	Red LED (660nm)	Infrared LED (850nm)
Sensitivity adjustment		Built-in VR						
Operation mode		Light ON/Dark ON mode selectable						
Control output		NPN or PNP open collector output • Load voltage : Max. 26.4VDC • Load current : Max. 100mA • Residual voltage ☞ NPN : Max. 1V, ☞ PNP : Min. (Power supply-2.5V)						
Protection circuit		Reverse polarity protection, output short-circuit protection		Reverse polarity protection, interference prevention function, output short-circuit protection				
Indicator		Operation : Red, Stable : Green(Emitter's power indicator : Green)						
Connection		**BJ** ☞ Outgoing cable type(2m), **BJ-C** ☞ M8 Connector						
Protection		**BJ** ☞ IP65(IEC standard), **BJ-C** ☞ IP67(IEC standard)						

(※1) The sensing distance is extended to 0.1 to 4m or 0.1 to 5m when using optional reflector MS-2S or MS-3S.

▣Connections

●Through-beam

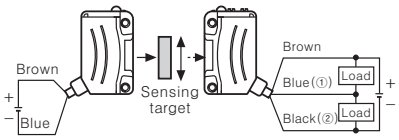

●Polarized retroreflective

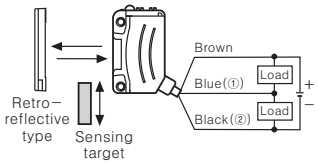

●Diffuse reflective

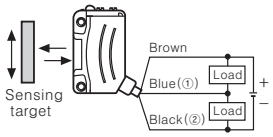

※① : The load connection of NPN open collector output,
② : The load connection of PNP open collector output

▣Feature data

◎Through-beam

●BJ15M-TDT-(C)-(P) / BJ10M-TDT-(C)-(P) / BJ7M-TDT-(P)

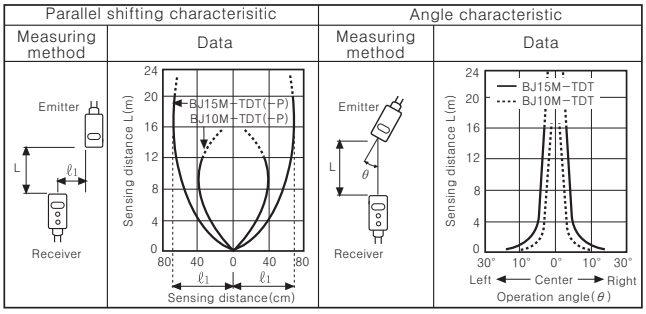

◎Polarized retroreflective

●BJ3M-PDT-(C)-(P)

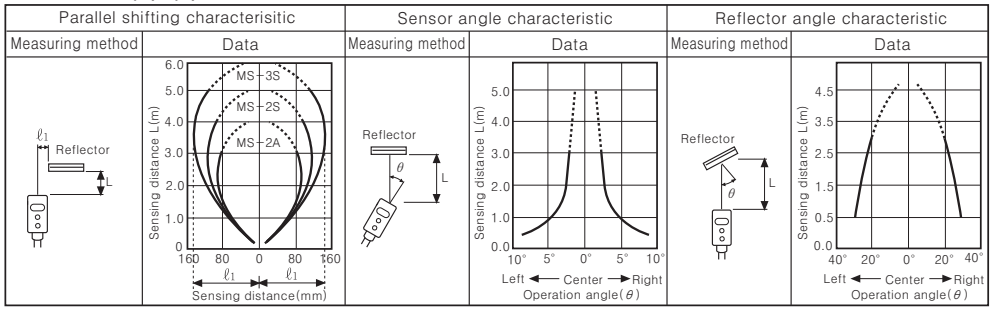

◎Diffuse reflective type

●BJ1M-DDT-(C)-(P) **●BJ300-DDT-(C)-(P)** **●BJ100-DDT-(C)-(P)**

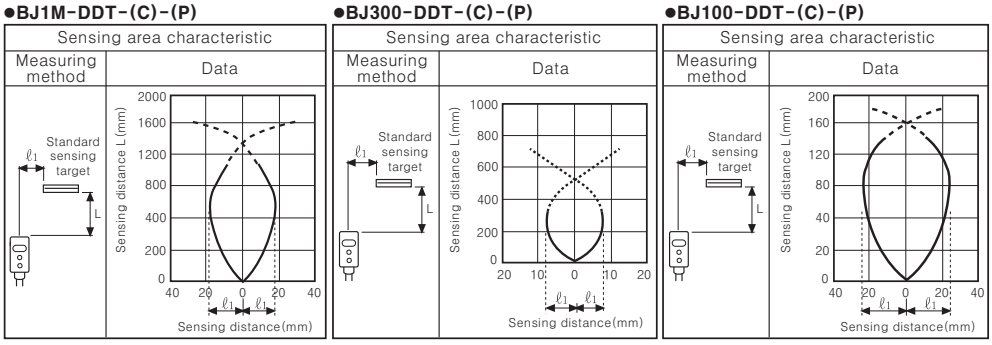

Transparent glass sensing/BGS reflective/Micro spot type photoelectric sensor(BJ Series)

▣Specifications

Model							
NPN open collector output	BJG30-DDT		BJ30-BDT	BJ50-BDT	BJ100-BDT	BJN50-NDT	BJN100-NDT
PNP open collector output	———		BJ30-BDT-P	BJ50-BDT-P	BJ100-BDT-P	BJN50-NDT-P	BJN100-NDT-P
Appearances & Dimensions	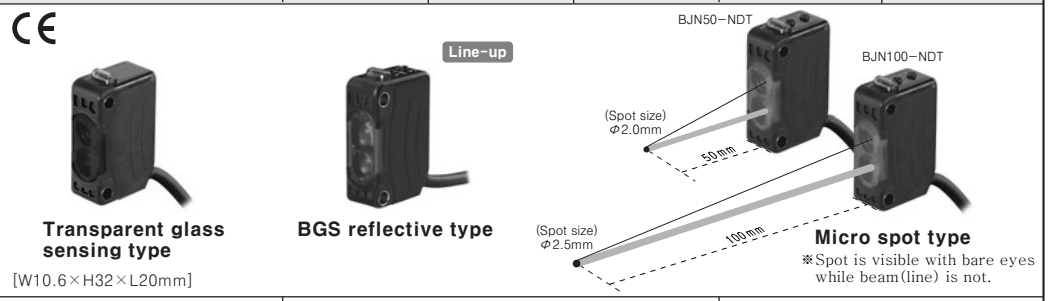 Transparent glass sensing type [W10.6×H32×L20mm] BGS reflective type Micro spot type ※Spot is visible with bare eyes while beam(line) is not.						
Sensing type	Diffuse reflective		BGS reflective			Narrow beam reflective	
Sensing distance	0 to 30mm	0 to 15mm	10 to 30mm (Non-glossy white paper 50×50mm)	10 to 50mm (Non-glossy white paper 50×50mm)	10 to 100mm (Non-glossy white paper 100×100mm)	30 to 70mm	70 to 130mm
Sensing target	100×100mm Non-glossy white paper	Transparent glass 50×50mm (t=3.0mm)	Translucent, opaque materials			Translucent, opaque materials	
Min.diameter of transmitting SPOT	———		Approx. ϕ5.0mm	Approx. ϕ4.5mm	Approx. ϕ6.5mm	Approx. ϕ2.0mm	Approx. ϕ2.5mm
Min.sensing target	———					Approx. min. ϕ 0.2mm(Copper wire)	
Hysteresis	Max. 20% at sensing distance		Max. 10% at sensing distance			Max. 25% at sensing distance	Max. 20% at sensing distance
Response time	Max. 1ms		Max. 1.5ms			Max. 1ms	
Power supply	12-24VDC ±10%(Ripple P-P : Max.10%)						
Current consumption	Max. 30mA						
Light source/Wavelength	Infrared LED(850nm)		Red LED(660nm)			Red LED(650nm)	
Control output	NPN open collector output • Load voltage : Max. 26.4VDC • Load current : Max. 100mA • Residual voltage : Max. 1V		NPN or PNP open collector output • Load voltage : Max. 26.4VDC • Load current : Max. 100mA • Residual voltage ☞ NPN : Max. 1V, PNP : Min. (Power voltage -2.5V)				
Sensitivity adjustment	———		Built-in VR				
Operation mode	Light ON mode fixed		Light ON / Dark ON mode selectable(Short rotator adjuster)				
Protection circuit	Reverse polarity protection, output short-circuit protection, interference prevention function						
Indicator	Operation indicator : Red, Stability indicator : Green						
Connection	Outgoing cable type						
Protection	IP65(IEC standard)						

▣Connections

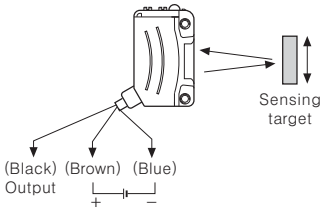

▣Feature data

◎Diffuse/Narrow beam reflective

●BJG30-DDT

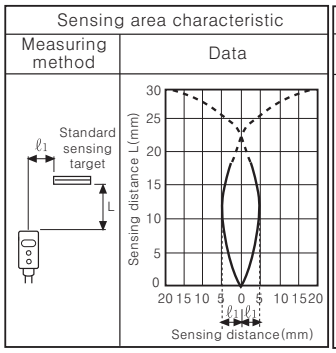

●BJN50-NDT-(P)

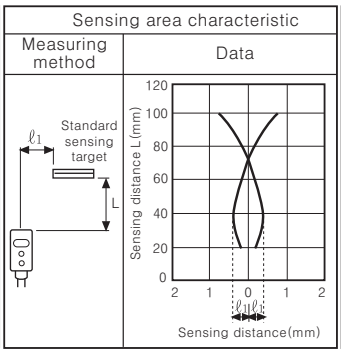

●BJN100-NDT-(P)

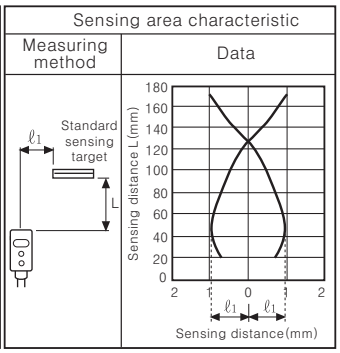

◎BGS reflective

●BJ30-BDT / BJ30-BDT-P

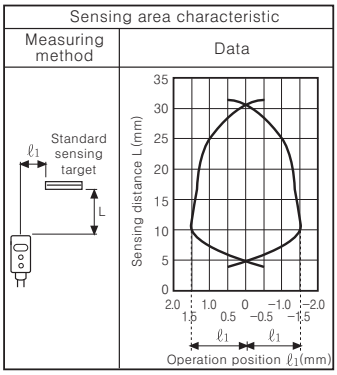

●BJ50-BDT / BJ50-BDT-P

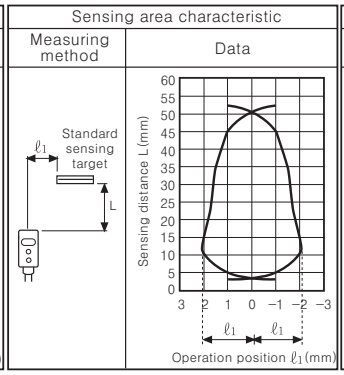

●BJ100-BDT / BJ100-BDT-P

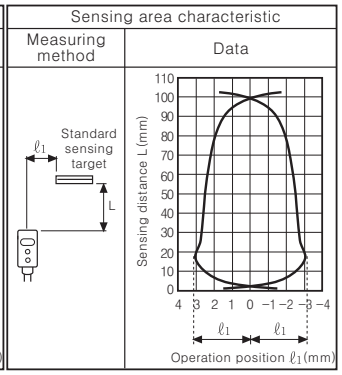

Ultra-slim and amplifier built-in type photoelectric sensor(BTF Series)

▣Specifications

Model						
NPN open collector output	BTF1M-TDTL	BTF1M-TDTD	BTF30-DDTL	BTF30-DDTD	BTF15-BDTL	BTF15-BDTD
PNP open collector output	BTF1M-TDTL-P	BTF1M-TDTD-P	BTF30-DDTL-P	BTF30-DDTD-P	BTF15-BDTL-P	BTF15-BDTD-P

Appearances & Dimensions

[W13×H19×L4.6mm]

[W13×H24×L4.6mm]

Sensing type	Through-beam		Diffuse reflective		BGS reflective	
Sensing distance	1m		5 to 30mm (Non-glossy white paper 50×50mm)		1 to 15mm (Non-glossy white paper 50×50mm)	
Sensing target	Opaque materials of max. ϕ2mm		Opaque materials, Translucent materials			
Min.sensing target	Opaque materials of ϕ2mm		ϕ0.2mm (Sensing distance 10mm)		ϕ0.2mm non-illuminated objects (Sensing distance 10mm)	
Hysteresis	———		Max. 20% at rated sensing distance		Max. 5% at rated sensing distance	
Refl ectivity characteristics (black/white error)	———		———		Max. 15% of maximum sensing distance	
Response time	Max. 1ms					
Power supply	12-24VDC ±10%(Ripple P-P: Max. 10%)					
Current consumption	Max. 20mA(This is for each emitter and receiver of throught-beam type)					
Light source/Wavelength	Red LED(650nm)					
Operation mode	Light ON	Dark ON	Light ON	Dark ON	Light ON	Dark ON
Control output	< NPN or PNP open collector output > • Load voltage: Max. 26.4VDC • Load current: Max. 50mA • Residual voltage: Max. 1V(NPN), Max. 2V(PNP)					
Protection circuit	Reverse polarity protection, output short-circuit protection					
Indicator	Operation indicator: Red, Stability indicator: Green					
Connection	Outgoing cable					
Protection	IP67(IEC standards)					

▣Connections

◎Through-beam

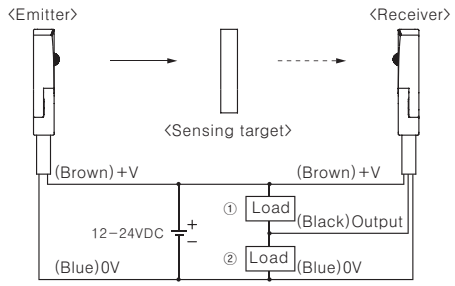

◎Diffuse reflective/BGS reflective

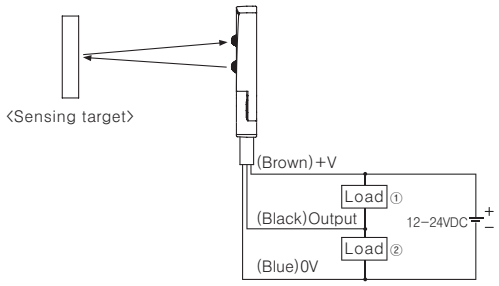

※① : Load connection for NPN output
※② : Load connection for PNP output

▣Feature data

◎Through-beam
●BTF1M-TDTL / BTF1M-TDTL-P

Sensing area characteristic

Measuring method	Data

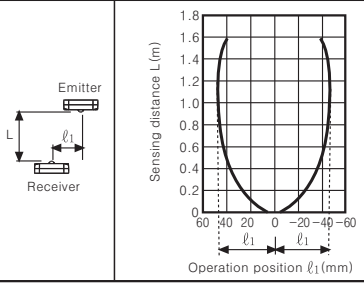

◎Diffuse reflective
●BTF30-DDTL / BTF30-DDTL-P

Sensing area characteristic

Measuring method	Data

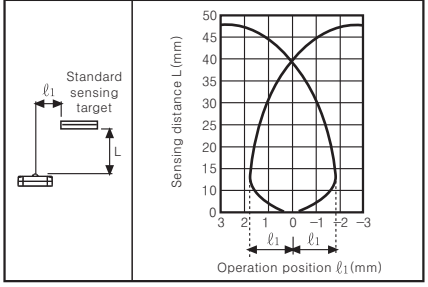

◎BGS reflective
●BTF15-BDTL / BTF15-BDTL-P

Sensing area characteristic

Measuring method	Data

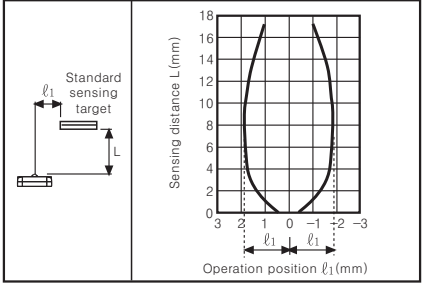

Photo micro sensor(BS5 Series)

▣Specifications

Model	BS5-K2M	BS5-T2M	BS5-L2M	BS5-Y2M	BS5-V2M
Appearances & Dimensions	[W25×H6.6×L27.5mm]	[W25×H13.7×L27.6mm]	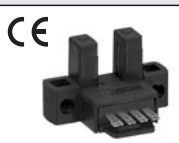 [W25×H15.4×L18.7mm]	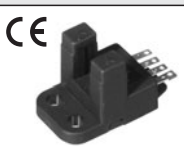 [W13.5×H15.4×L25.4mm]	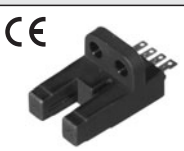 [W13.5×H27.6×L13mm]
Sensing type	Through-beam(Not modulated)				
Sensing distance	5mm fixed				
Sensing target	Opaque materials of Min. 0.8×1mm				
Hysteresis	0.05mm				
Response time	Received light : Max. 20μs, Interrupted light : Max. 100μs				
Power supply	5-24VDC ±10% (Ripple P-P : Max. 10%)				
Current consumption	Max. 30mA(at 26.4VDC)				
Operation mode	Light ON / Dark ON mode selectable by control terminal				
Control output	NPN open collector output ☞ Load voltage : Max. 30VDC, Load current : Max. 100mA Residual voltage : Max. 1.2V				
Response frequency	2kHz(Please see the measuring range of frequency response)				
Indicator	Infrared LED(940nm)				
Connection	Connector type				

▣Connections

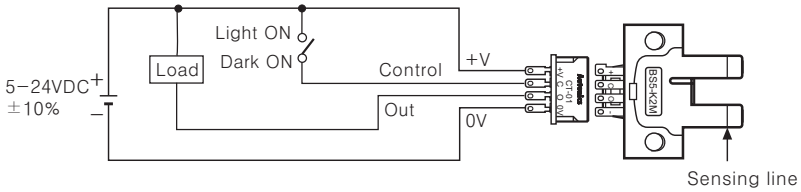

※Connect the unit using socket.
If it is soldered on terminal pin, product demage may result.

▣Dimensions

Unit:mm

●BS5-K2M

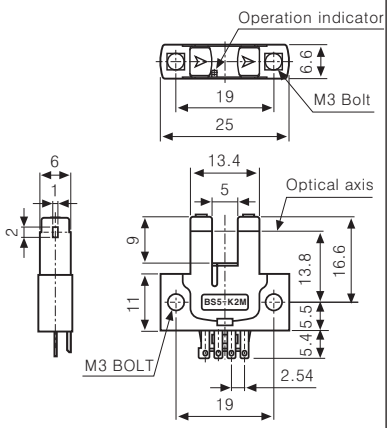

●BS5-T2M

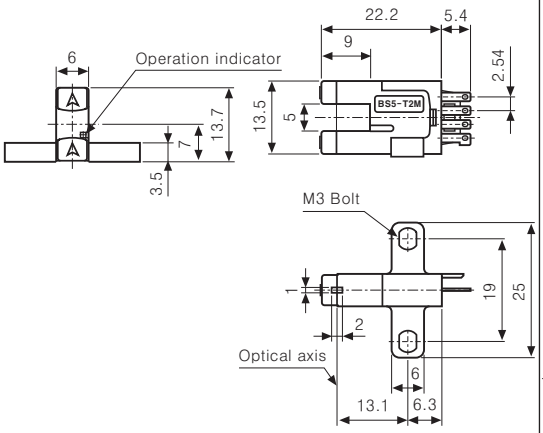

●BS5-L2M

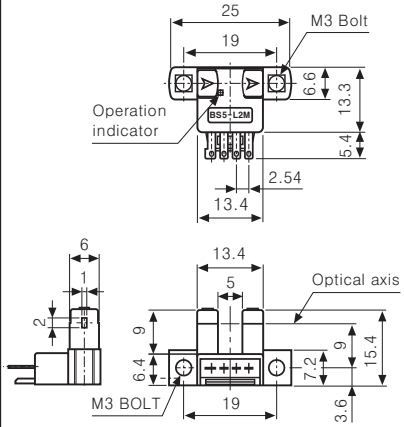

●BS5-V2M

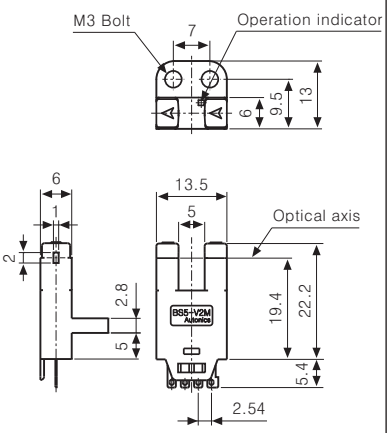

●BS5-Y2M

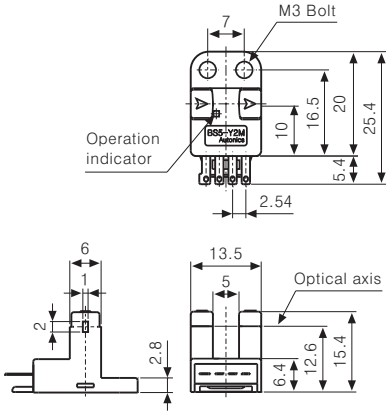

●PCB mounting hole

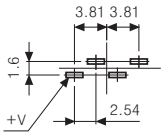

●Socket:**CT-01**(Sold Separately)

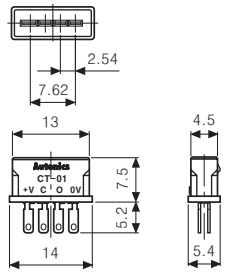

●Socket:**CT-02**(Sold Separately)

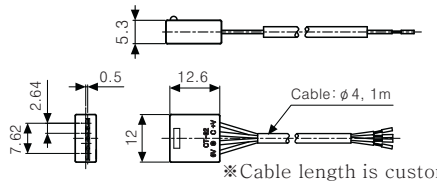

※Cable length is customizable.

Flat type photoelectric sensor(BPS Series)

▣Specifications

Model	NPN open collector output		PNP open collector output	
	BPS3M-TDT	**BPS3M-TDTL**	**BPS3M-TDT-P**	**BPS3M-TDTL-P**
Appearances & Dimensions	CE [W16×H7.5×L28mm]			
Sensing type	Through-beam			
Sensing distance	3m			
Sensing target	Opaque materials of Min. ϕ5mm			
Response time	Max. 1ms			
Power supply	12-24VDC ±10%(Ripple P-P : Max. 10%)			
Current consumption	Max. 20mA			
Light source	Infrared LED(850nm)			
Operation mode	Dark ON	Light ON	Dark ON	Light ON
Control output	NPN open collector output ☞ Load voltage : Max. 30VDC, Load current : Max. 100mA, Residual voltage : Max. 1V		PNP open collector output ☞ Load current : Max.100mA, Residual voltage : Min. (Power supply -2.5V)	
Protection circuit	Reverse polarity protection, short-circuit protection			
Indicator	Emitter : Power indicator(Red LED), Receiver : Operation indicator(Red LED)			
Connection	Outgoing cable : 2m			
Protection	IP67(IEC standard)			

▣Connections

NPN open collector output	PNP open collector output
BPS3M-TDT1 BPS3M-TDT2 / BPS3M-TDTL2 	BPS3M-TDT1 BPS3M-TDT2-P / BPS3M-TDTL2-P

▣Feature data

Measuring method	Parallel shifting characteristic	Measuring method	Angle characteristic
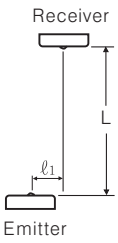	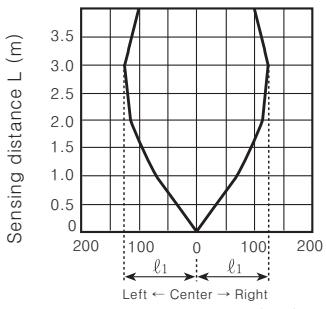		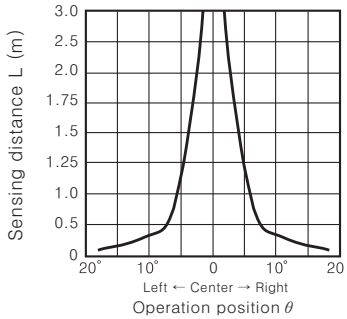

Small, diffuse reflective type photoelectric sensor(BA2M Series)

▣Specifications

Model	NPN open collector	BA2M-DDT	BA2M-DDTD
	PNP open collector	BA2M-DDT-P	BA2M-DDTD-P
Appearances & Dimensions		[W19×H15.5×L48.5mm]	
Sensing type		Diffuse reflective	
Sensing distance		2m(Non-glossy white paper 200×200mm)	
Sensing target		Translucent, opaque material	
Hysteresis		Max. 20% at sensing distance	
Response time		Approx. 1ms	
Power supply		12-24VDC ±10%(Ripple P-P : Max. 10%)	
Current consumption		Max. 15mA(Max. 30mA when the output is ON)	
Light source		Infrared LED(850nm)	
Sensitivity adjustment		Built-in VR	
Operation mode		Light ON	Dark ON
Control output		NPN or PNP open collector output Load voltage : Max. 26.4VDC, Load current : Max. 100mA, Residual voltage☞ NPN : Max. 1V, PNP : Min. (Power supply -2.5V)	
Protection circuit		Reverse polarity protection, output short-circuit protection	
Indicator		• Operation : Red • Stability : Orange(Light ON), Green(Dark ON)	

▣Connections

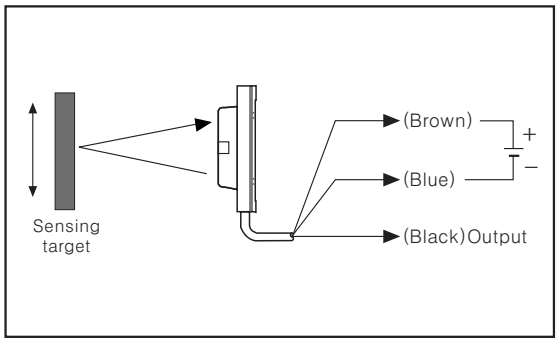

▣Dimensions

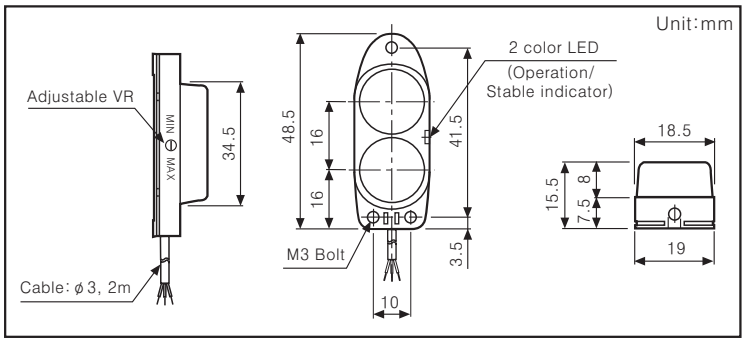

▣Feature data

Sensing area

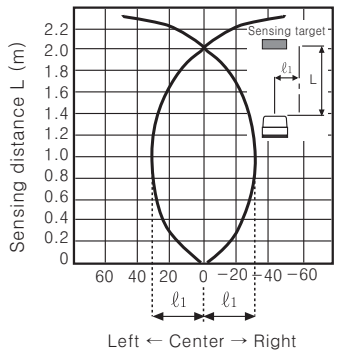

Sensing distance against the target size

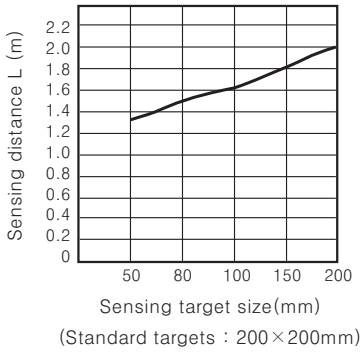

Sensing distance against the target color

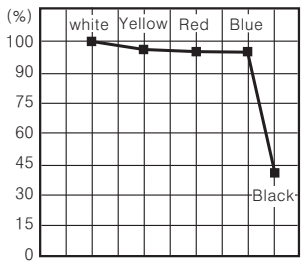

In case, Non-glossy white paper 100%

Small diffuse reflective and convergent reflective(Timer) type photoelectric sensor(BYD Series)

▣Specifications

Model	BYD30-DDT BYD30-DDT-U BYD30-DDT-T	BYD50-DDT BYD50-DDT-U BYD50-DDT-T	BYD100-DDT	BYD3M-TDT	BYD3M-TDT-P
Appearances & Dimensions	[W12×H32×L18mm]		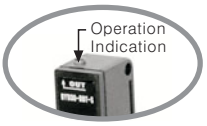 BYD30-DDT-U BYD50-DDT-U	[W12×H32×L18mm]	
Sensing type	Limited distance reflective		Diffuse reflective	Through-beam	
Sensing distance	10~30mm(50×50mm Non-glossy white paper)	10~50mm(50×50mm Non-glossy white paper)	100mm(50×50mm Non-glossy white paper)	3m	
Sensing target	Translucent, opaque materials			Opaque materials of Min. ϕ6mm	
Hysteresis	Max. 10% at sensing distance		Max. 20% at sensing distance	———	
Response time	Operation:Max. 3ms, Return:Max. 100ms (When the timer VR is minimum)		Operation:Max. 3ms, Return:Max. 100ms	Max. 1ms	
Power supply	12-24VDC ±10%(Ripple P-P : Max. 10%)				
Current consumption	Max. 35mA			Max. 30mA	
Light source	Infrared LED(modulated)				
Sensitivity adjustment	Fixed		Built-in VR	Fixed	
Operation mode	Light ON mode fixed			Dark ON(Light ON : Option)	
Control output	NPN open collector output ☞ Load voltage : Max. 30VDC, Load current : Max. 50mA, Residual voltage : Max. 1V			NPN open collector output ☞ Load voltage:Max.30VDC, Load current:Max.100mA, Residual voltage:Max.1V	PNP open collector output ☞ Load current:Max. 100mA, Output voltage:Min. (Power supply-2.5V)
Protection circuit	Reverse polarity protection, output short-circuit protection				
Timer function	Built-in OFF delay Timer(Adjustable) <Delay time : Max. 0.1 to 2sec. >		———		
Indicator	Operation indicator : Red LED				
Connection	Outgoing cable(2m)				

▣Connections

●Through-beam

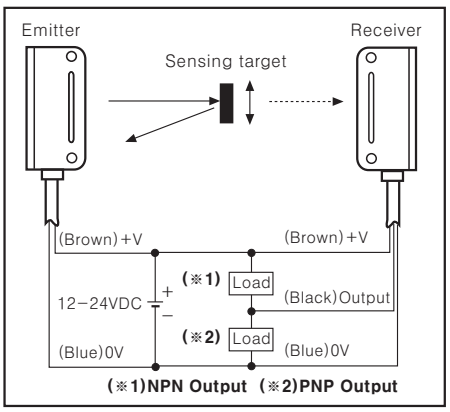

●Limited distance reflective
●Diffuse reflective

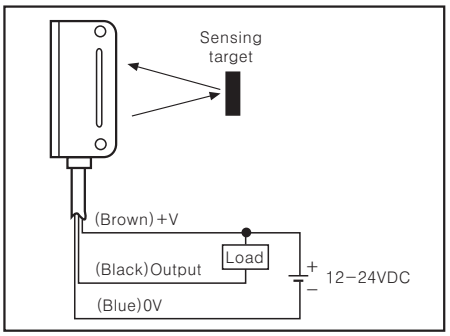

▣Feature data

●BYD30(50)-DDT(-U)/BYD30(50)-DDT-T

Sensing area characteristic

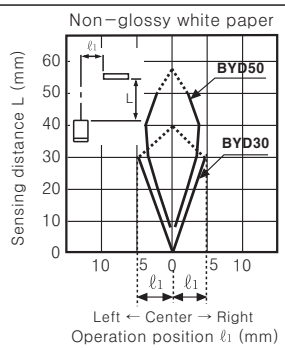

●BYD100-DDT

Sensing area characteristic

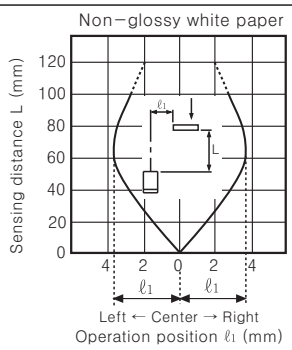

●BYD3M-TDT

Parallel shifting characteristic

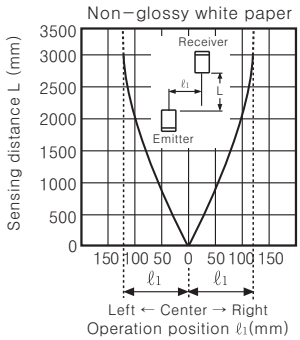

Sensor angle characteristic

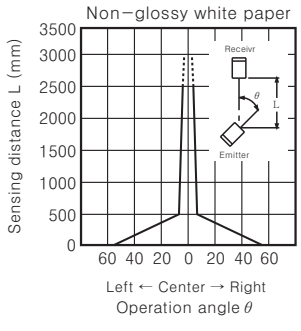

Small emitter/receiver synchronizing type photoelectric sensor(BY/BYS Series)

▣Specifications

Model	Standard type	Side sensing type
	BY500-TDT	**BYS500-TDT**
Appearances & Dimensions	[W12×H16×L30mm]	[W12×H30×L16mm]
Sensing type	Through-beam	
Sensing distance	500mm	
Sensing target	Opaque materials of Min. ϕ5mm	
Response time	Max. 1ms	
Power supply	12-24VDC ±10%(Ripple P-P : Max. 10%)	
Current consumption	Max. 30mA	
Light source	Infrared LED(940nm)	
Operation mode	Dark ON	
Control output	NPN open collector output ☞ Load voltage : 30VDC, Load current : Max. 100mA, Residual voltage : Max. 1V	
Protection circuit	Reverse polarity protection, output short-circuit protection	
Indicator	Operation indicator : Red LED	
Connection	Outgoing cable(2m)	

▣Connections

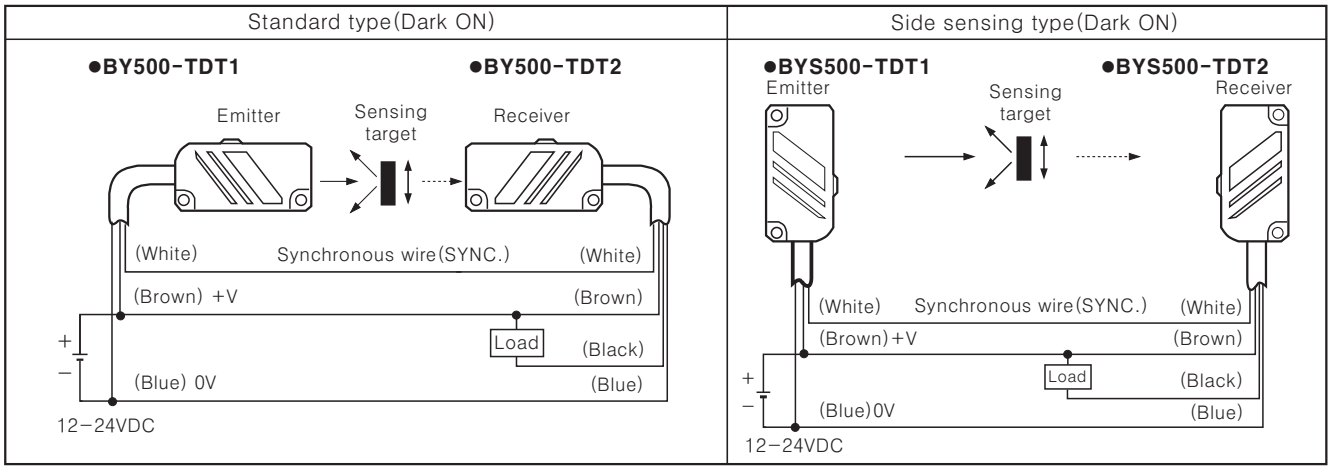

※ The power of the emitter and the receiver must be supplied from same power line.
※ Synchronous wire(White) of the receiver must be connected with that of the emitter.

▣Feature data

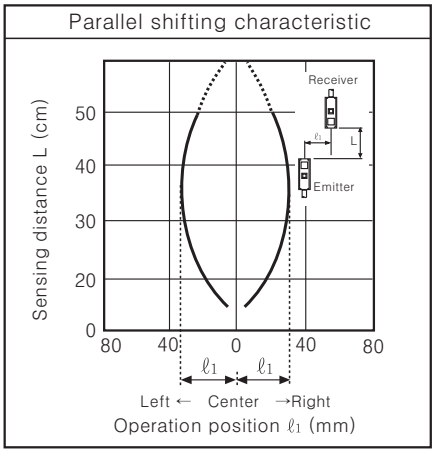

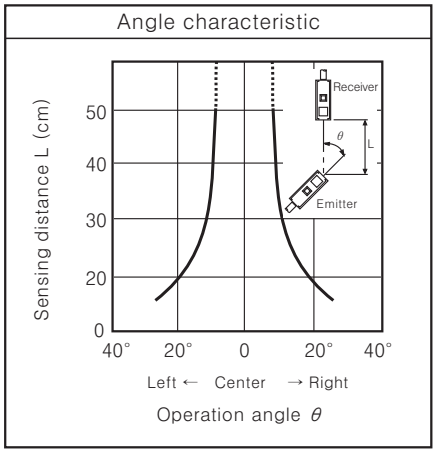

Power supply built-in type photoelectric sensor(BEN Series)

▣Specifications

Model				
Power supply built-in, Relay contact output	BEN10M-TFR	BEN5M-MFR	BEN3M-PFR	BEN300-DFR
DC power, Solid state output	BEN10M-TDT	BEN5M-MDT	BEN3M-PDT	BEN300-DDT
Appearances & Dimensions	[W18×H50×L50mm]	[W18×H50×L50mm]	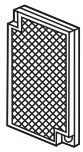 MS-2 Reflector (W40.5×H60.5) 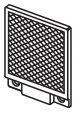 MS-4 Reflector (W29.3×H38) ※MS-4 is sold separately.	[W18×H50×L50mm]
Sensing type	Through-beam	Retroreflective	Retroreflective (with polarizing filter)	Diffuse reflective
Sensing distance	10m	0.1 to 5m (※1)	0.1 to 3m (※1)	300mm (※2)
Sensing target	Opaque materials of Min. ϕ16mm	Opaque materials of Min. ϕ60mm		Translucent, opaque materials
Hysteresis	————			Max. 20% at sensing distance
Response time	• DC power : Max. 1ms • AC/DC power : Max. 20ms			
Power supply	• DC power : 12-24VDC ±10%(Ripple P-P:Max. 10%) • AC/DC power : 24-240VAC ±10% 50/60Hz, 24-240VDC(Ripple P-P:Max. 10%)			
Power consumption	• DC power : Max. 40mA • AC/DC power : Max. 4VA			
Light source	Infrared LED(850nm)		Red LED(660nm)	Infrared LED(940nm)
Sensitivity adjustment	Fixed	Built-in VR		
Operation mode	Light ON / Dark ON mode selectable			
Control output	●DC power type ☞ NPN/ PNP synchronous output [Load voltage : Max. 30VDC, Load current : Max. 200mA, Residual voltage ☞ NPN : Max. 1V, PNP : Min. (Power supply-2.5V) ●AC/DC power type ☞ Relay contact output [Relay contact capacity : 30VDC 3A resistive load, 250VAC 3A resistive load. Relay contact composition : 1c			
Light receiving element	Built-in IC type photo diode			
Indicator	Operation indicator : Orange, Stable indicator : Green (The orange lamp on Emitter of transmitted beam type is for power indication)			
Connection	Outgoing cable(2m)			

(※1) It is mounting distance between sensor and reflector MS-2 and it is same when MS-4 is used. It is detectable under 0.1m.
(※2) It is for Non-glossy white paper(100×100mm).

▣Connections

Through-beam	Retroreflective	Diffuse reflective
●BEN10M-TFR1 ●BEN10M-TFR2 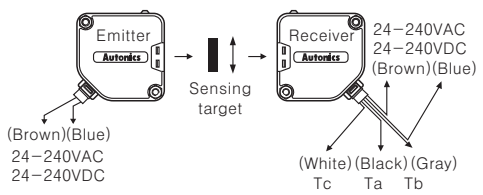	●BEN5M-MFR/BEN3M-PFR (with polarizing filter) 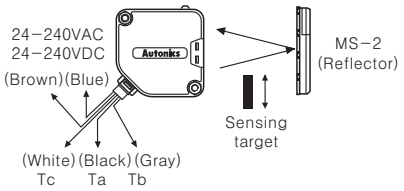	●BEN300-DFR 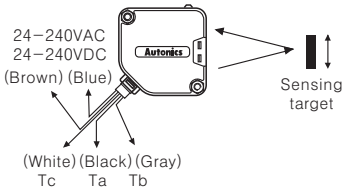
●BEN10M-TDT1 ●BEN10M-TDT2 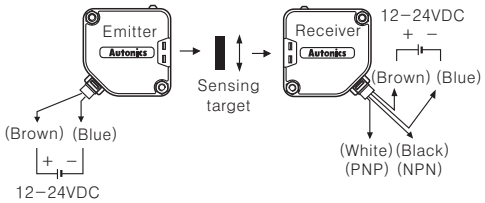	●BEN5M-MDT/BEN3M-PDT (with polarizing filter) 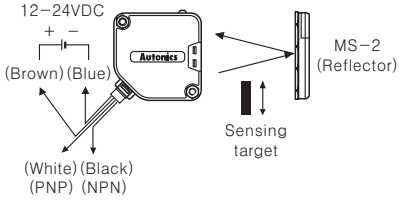	●BEN300-DDT 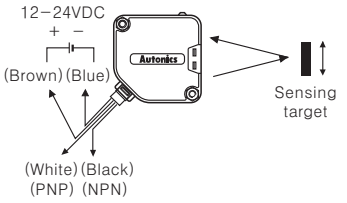

※Unused must be insulated.

Power supply built-in type photoelectric sensor(BEN Series)

▣Characteristic

◎Through-beam

●BEN10M-TFR ●BEN10M-TDT

Parallel shifting characteristic

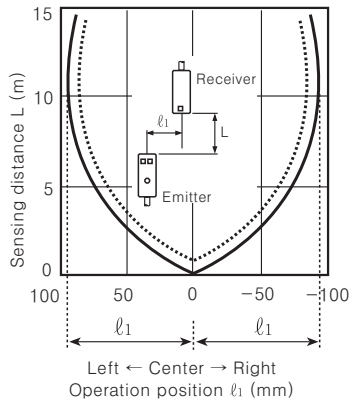

Sensor angle characteristic

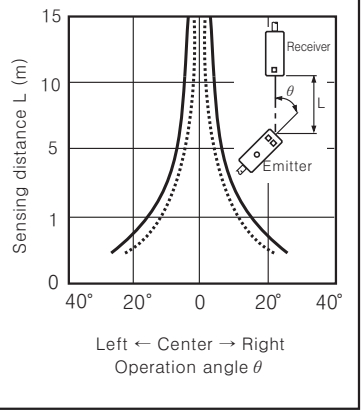

◎Diffuse reflective

●BEN300-DFR ●BEN300-DDT

Sensing area characteristic

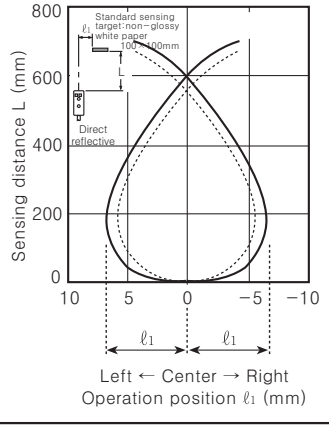

◎Retroreflective

●BEN5M-MFR ●BEN5M-MDT

Parallel shifting characteristic

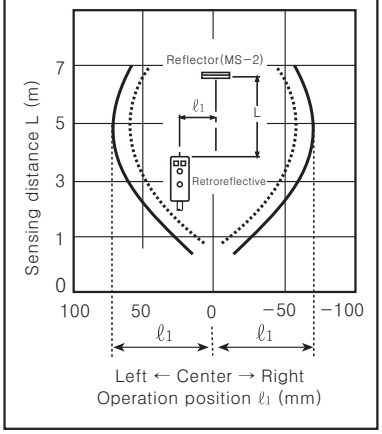

Sensor angle characteristic

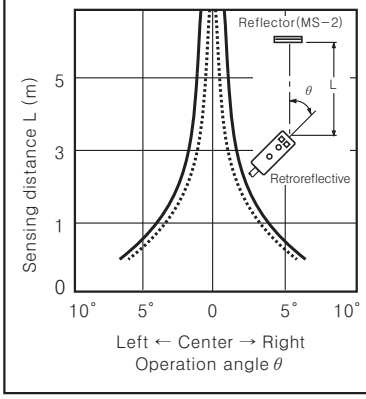

Reflector angle characteristic

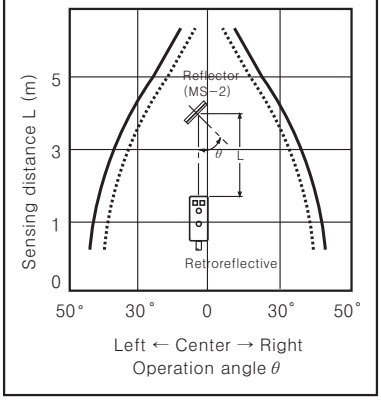

◎Retroreflective with polarizing filter

●BEN3M-PFR ●BEN3M-PDT

Parallel shifting characteristic

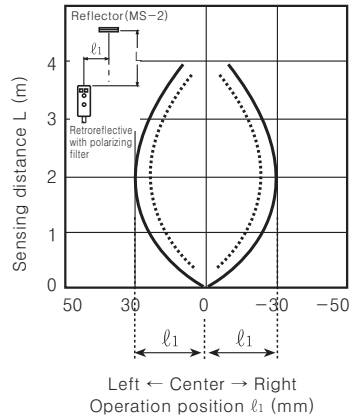

Sensor angle characteristic

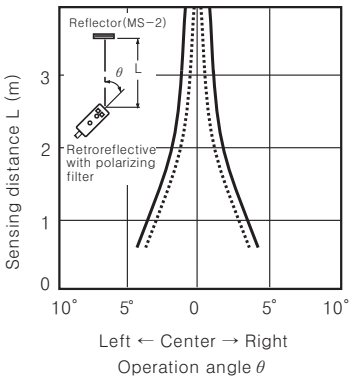

Reflector angle characteristic

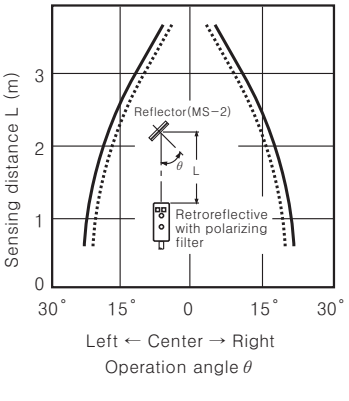

※ ——— : Operation level
····· : Stable operation level

Power supply built-in type(Terminal) photoelectric sensor(BX Series)

■Specifications

Model					
Standard type		BX15M-TFR BX15M-TDT	BX5M-MFR BX5M-MDT	BX3M-PFR BX3M-PDT	BX700-DFR BX700-DDT
With timer		BX15M-TFR-T BX15M-TDT-T	BX5M-MFR-T BX5M-MDT-T	BX3M-PFR-T BX3M-PDT-T	BX700-DFR-T BX700-DDT-T
Appearances & Dimensions		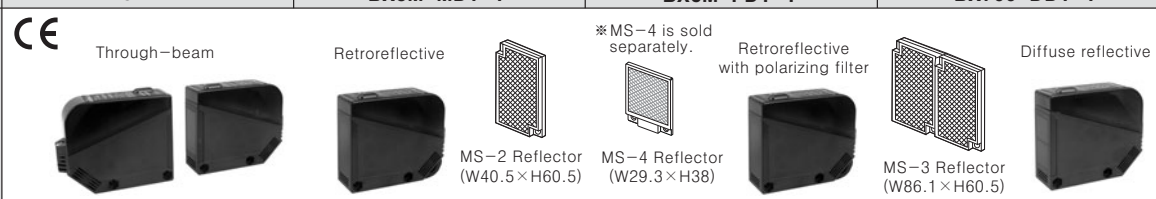			
Sensing type		Through-beam	Retroreflective	Retroreflective with polarizing filter	Diffuse reflective
Sensing distance		15m	(※1) 0.1 to 5m (Reflector MS-2)	(※2) 0.1 to 3m (Reflector MS-3)	700mm (200×200mm Non glossy white paper)
Sensing target		Opaque materials of Min. ϕ15mm	Opaque materials of Min. ϕ60mm		Translucent, Opaque materials
Hysteresis		———			Max. 20% at sensing distance
Response time		• DC power : Max. 1ms • AC/DC power : Max. 20ms			
Power supply		• DC power : 12-24VDC ±10%(Ripple P-P:Max. 10%) • AC/DC power : 24-240VAC ±10% 50/60Hz, 24-240VDC(Ripple P-P:Max. 10%)			
Current consumption		Max. 3VA			
Light source		Infrared LED(850nm)		Red LED(660nm)	Infrared LED(940nm)
Sensitivity adjustment		Built-in VR			
Operation mode		Light ON / Dark ON mode selectable			
Control output		●DC power type ☞ NPN/ PNP synchronous output Load voltage : Max. 30VDC, Load current : Max. 200mA, Residual voltage ☞ NPN : Max. 1V, PNP : Min. (Power supply -2.5V) ●AC/DC power type ☞ Relay contact output Contact capacity : 30VDC 3A, 250VAC 3A at resistive load, Contact composition: 1c(SPDT)			
Self-diagnosis output		●DC power type ☞ NPN open collector output (When photoelectric sensor operates stably, Green LED turns ON, and Output transistor turns ON.) ☞ Load voltage : Max. 30VDC, Load current : Max. 50mA, Residual voltage : Max. 1V at 50mA, Max. 0.4V at 16mA ●AC/DC power type ☞ Green LED turns on at stable operation			
Timer function		Selectable ON Delay, OFF Delay, One Shot Delay by slide switch [Delay Time : 0.1 to 5sec.(VR adjustable)]			
Indicator		Operation indicator : Yellow LED, Self-diagnosis indicator : Green LED			
Connection		Terminal connection			

(※1) It is same when using MS-4 and it is able to detect under 0.1m.
(※2) Using MS-2, sensing distance will be 0.1 to 2m, it is able to detect under 0.1m.

■Connections

●BX15M-TFR1

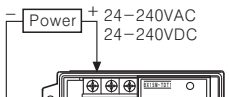

●BX15M-TFR 2, BX15M-TFR-T2

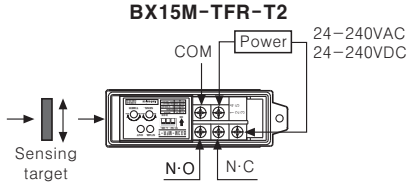

●BX15M-TDT1

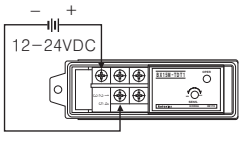

●BX15M-TDT2, BX15M-TDT-T2

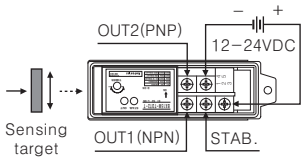

●BX5M-MFR, BX5M-MFR-T
●BX3M-PFR, BX3M-PFR-T

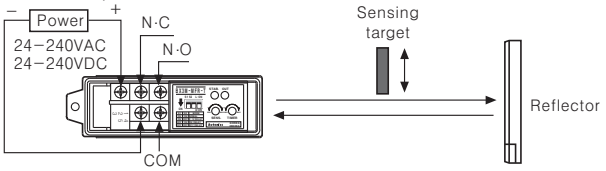

●BX5M-MDT, BX5M-MDT-T
●BX3M-PDT, BX3M-PDT-T

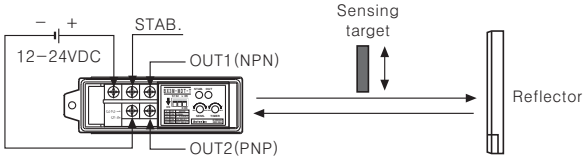

●BX700-DFR, BX700-DFR-T

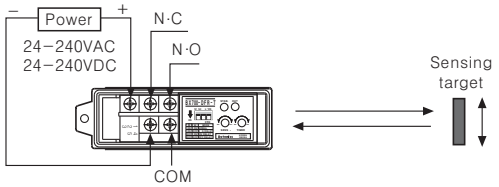

●BX700-DDT, BX700-DDT-T

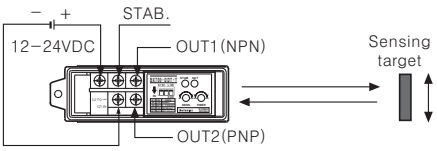

Power supply built-in type(Terminal) photoelectric sensor(BX Series)

▣Feature data

◎**Through-beam**

●**BX15M-TFR / BX15M-TFR-T**
●**BX15M-TDT / BX15M-TDT-T**

Parallel shifting characteristic

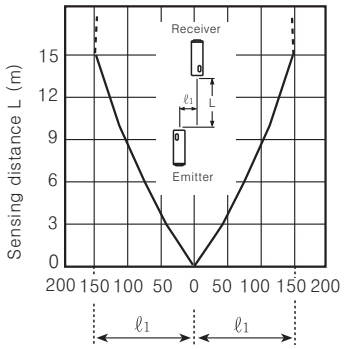

Sensor angle characteristic

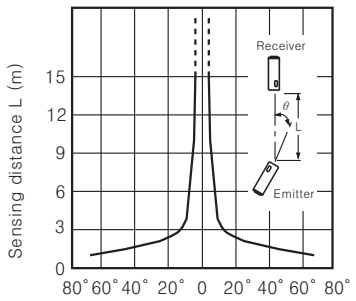

◎**Diffuse reflective**

●**BX700-DFR / BX700-DFR-T**
●**BX700-DDT / BX700-DDT-T**

Sensing area

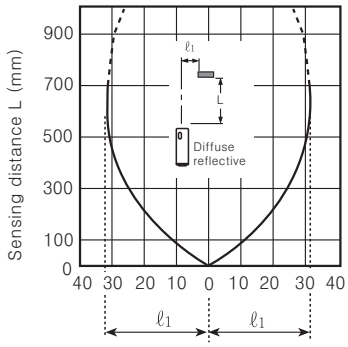

◎**Retroreflective**

●**BX5M-MFR / BX5M-MFR-T** ●**BX5M-MDT / BX5M-MDT-T**

Parallel shifting characteristic

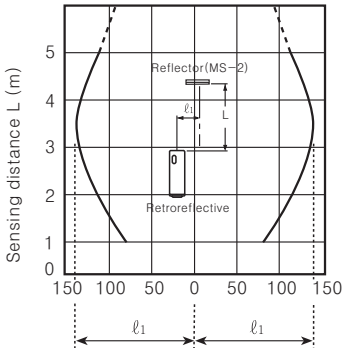

Sensor angle characteristic

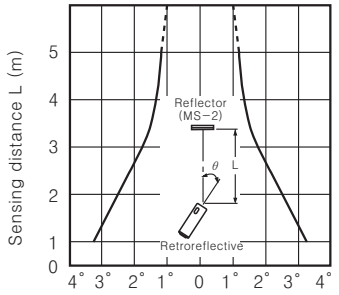

Reflector angle characteristic

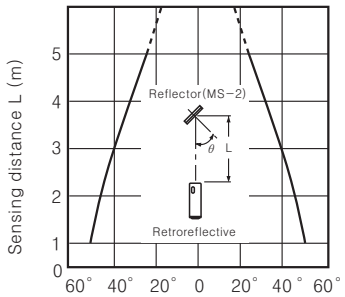

◎**Retroreflective with polarizing filter**

●**BX3M-PFR / BX3M-PFR-T** ●**BX3M-PDT / BX3M-PDT-T**

Parallel shifting characteristic

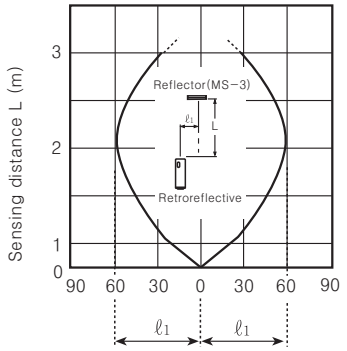

Sensor angle characteristic

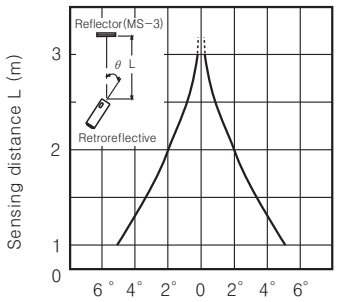

Reflector angle characteristic

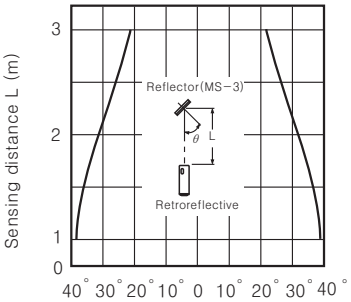

※ ——— : Operation level
····· : Stable operation level

Small and light, common type photoelectric sensor(BM Series)

▣Specifications

Model	BM3M-TDT	BM1M-MDT	BM200-DDT
Appearances & Dimensions	CE Through-beam [W16×H28×L52mm]	Retroreflective 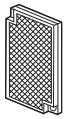 MS-2 Reflector (W40.5×H60.5)	※MS-5 is sold separately. MS-5 Reflector (W15.4×H24) Diffuse reflective
Sensing type	Through-beam	Retroreflective	Diffuse reflective
Sensing distance	3m	(※1) 0.1 to 1m	(※2) 200mm
Sensing target	Opaque materials of Min. ϕ8mm	Opaque materials of Min. ϕ60mm	Translucent, opaque materials
Hysteresis	————		Max. 10% at sensing distance
Response time	Max. 3ms		
Power supply	12-24VDC ±10% (Ripple P-P:Max. 10%)		
Current consumption	Max. 45mA	Max. 40mA	
Light source	Infrared LED(940nm)		
Sensitivity adjustment	Fixed		Built-in VR
Operation mode	Dark ON		Light ON
Control output	NPN open collector output ☞ Load voltage:Max. 30VDC, Load current:Max. 100mA, Residual voltage:Max. 1V		
Protection circuit	Reverse polarity protection		
Indicator	Operation indicator : Red LED		
Connection	Outgoing cable(2m)		

(※1) It is mounting distance between sensor and reflector MS-2 and it is same when MS-5 is used. It is detectable under 0.1m.
(※2) It is for Non-glossy white paper(100×100mm)

▣Connections

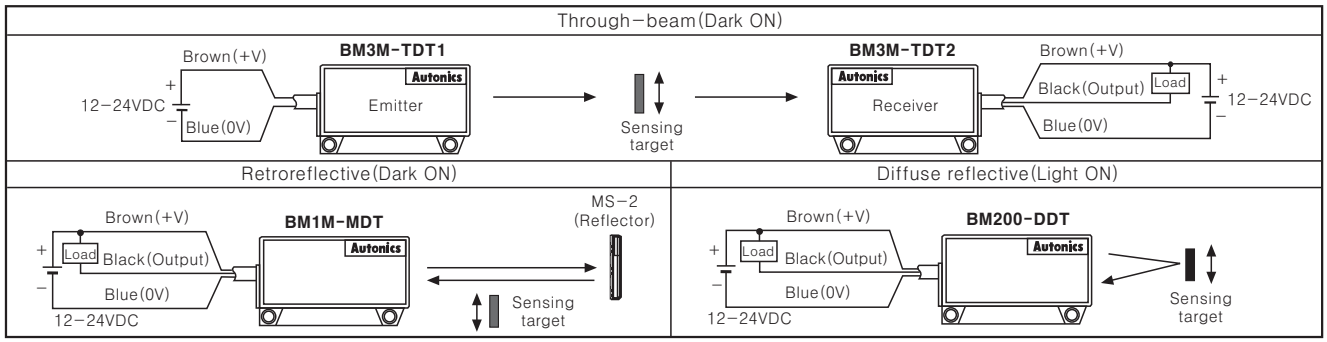

▣Feature data

◎Through-beam

●BM3M-TDT

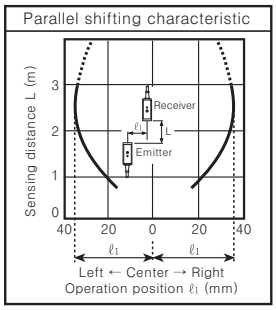

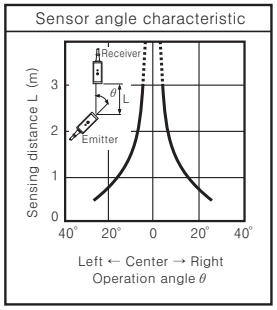

◎Diffuse reflective

●BM200-DDT

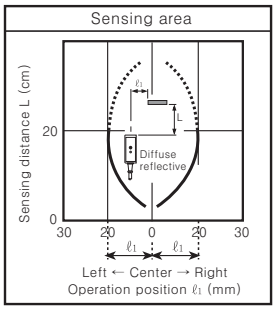

◎Retroreflective

●BM1M-MDT

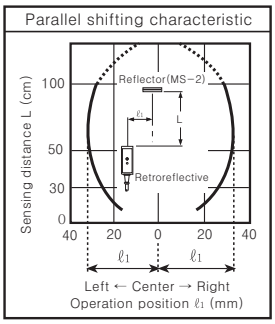

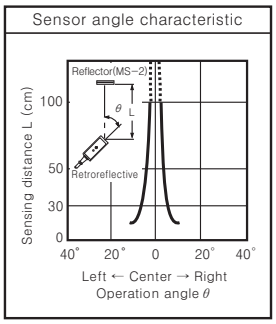

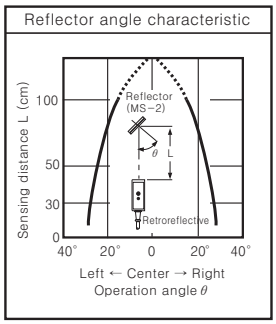

※ ——— : Operation level
····· : Stable operation level

Small and light, common type(Lateral sensing) photoelectric sensor(BMS Series)

▣Specifications

Model	BMS5M-TDT BMS5M-TDT-P	BMS2M-MDT BMS2M-MDT-P	BMS300-DDT BMS300-DDT-P
Appearances & Dimensions	CE Through-beam [W16×H55×L28.5mm]	Retroreflective MS-2 Reflector (W40.5×H60.5) ※MS-5 is sold separately. MS-5 Reflector (W15.4×H24)	Diffuse reflective
Sensing type	Through-beam	Retroreflective	Diffuse reflective
Sensing distance	5m	(※1) 0.1 to 2m	300mm
Sensing target	Opaque materials of Min. ϕ10mm	Opaque materials of Min. ϕ60mm	(※2) Translucent, opaque materials
Hysteresis	————		Max. 20% at sensing distance
Response time	Max. 1ms		
Power supply	12-24VDC ±10%(Ripple P-P : Max. 10%)		
Current consumption	Max. 50mA	Max. 45mA	
Light source	Infrared LED(940nm)		
Sensitivity adjustment	————	Built-in VR	
Operation mode	Selectable Light ON or Dark ON by control cable		
Control output	NPN or PNP open collector output • Load voltage : Max. 30VDC • Load current : Max. 200mA • Residual voltage ☞ NPN : Max. 1V, PNP : Min. (Power supply -2.5V)		
Protection circuit	Reverse power polarity, output short-circuit(overcurrent) protection circuit		
Indicator	Operation indicator : Red LED, Power indicator : Red LED(BMS5M-TDT1)		
Connection	Outgoing cable(2m)		

(※1) It is mounting distance between sensor and reflector MS-2 and it is same when MS-5 is used. It is detectable under 0.1m.
(※2) It is for Non-glossy white paper(100×100mm)

▣Connections

◎**Through-beam**
●**BMS5M-TDT, BMS5M-TDT-P**

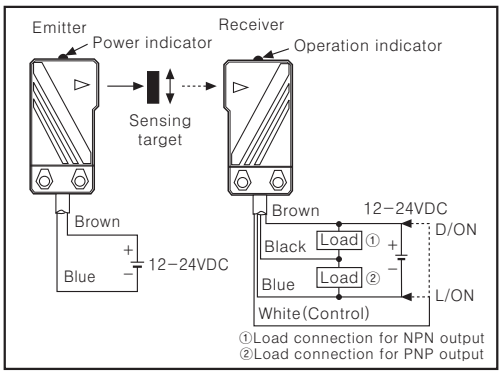

※Dark ON mode is on when control line is opened.

◎**Retroreflective**
●**BMS2M-MDT, BMS2M-MDT-P**

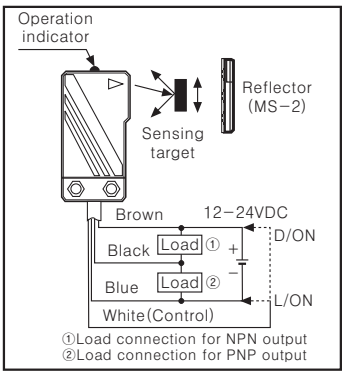

◎**Diffuse reflective**
●**BMS300-DDT, BMS300-DDT-P**

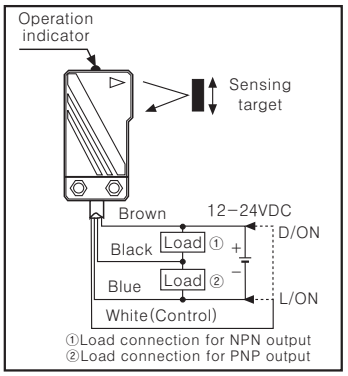

▣Feature data

◎**Through-beam** ●**BMS5M-TDT** ●**BMS5M-TDT-P**

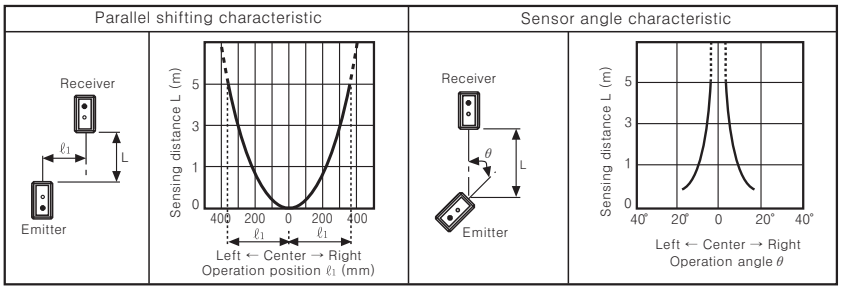

◎**Diffuse reflective**
●**BMS300-DDT** ●**BMS300-DDT-P**

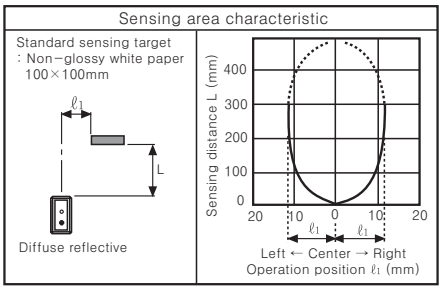

◎**Retroreflective** ●**BMS2M-MDT** ●**BMS2M-MDT-P**

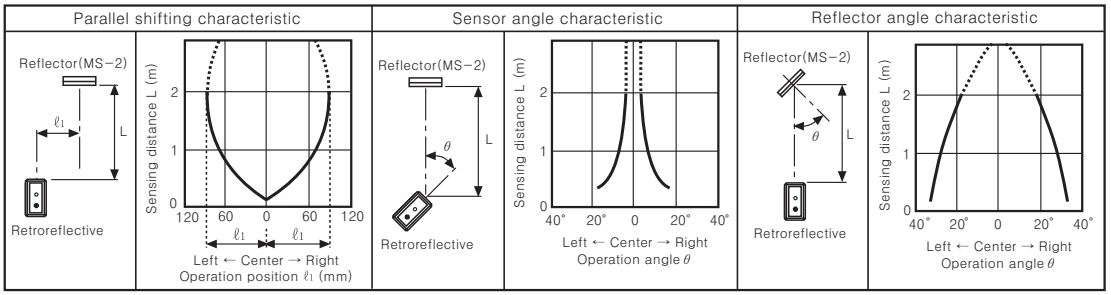

※ ——— : Operation level
····· : Stable operation level

Cylindrical photoelectric sensor(BR Series)

▣Specifications

Model	NPN open collector output	BR200-DDTN BR200-DDTN-C BRP200-DDTN BRP200-DDTN-C	BR100-DDT BR100-DDT-C BRP100-DDT BRP100-DDT-C	BR400-DDT BR400-DDT-C BRP400-DDT BRP400-DDT-C	BR3M-MDT BR3M-MDT-C BRP3M-MDT BRP3M-MDT-C	BR4M-TDTD BR4M-TDTD-C BR20M-TDTD BR20M-TDTD-C	BR4M-TDTL BR4M-TDTL-C BR20M-TDTL BR20M-TDTL-C
	PNP open collector output	BR200-DDTN-P BR200-DDTN-C-P BRP200-DDTN-P BRP200-DDTN-C-P	BR100-DDT-P BR100-DDT-C-P BRP100-DDT-P BRP100-DDT-C-P	BR400-DDT-P BR400-DDT-C-P BRP400-DDT-P BRP400-DDT-C-P	BR3M-MDT-P BR3M-MDT-C-P BRP3M-MDT-P BRP3M-MDT-C-P	BR4M-TDTD-P BR4M-TDTD-C-P BR20M-TDTD-P BR20M-TDTD-C-P	BR4M-TDTL-P BR4M-TDTL-C-P BR20M-TDTL-P BR20M-TDTL-C-P
Appearances & Dimensions		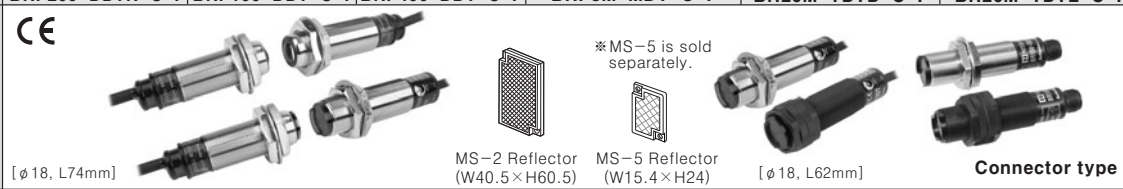					
Sensing type		Narrow beam reflective	Diffuse reflective		Retroreflective	Through-beam	
Sensing distance		200mm	100mm	400mm	0.1 to 3m	4m / 20m	
Sensing target		Translucent, Opaque materials			Opaque materials of Min. ϕ60mm	Opaque materials of Min. ϕ15mm	
Response time		Max. 1ms					
Power supply		12-24VDC ±10%(Ripple P-P:Max. 10%)					
Current consumption		Max. 45mA					
Light source		Infrared LED(940nm)	Infrared LED(850nm)		Red LED(660nm)	Infrared LED(850nm)	
Sensitivity adjusment		Adjustable(VR)				Fixed	
Operating mode		Selectable Light ON or Dark ON by control cable(White)				Dark ON	Light ON
Control output		NPN or PNP open collector output • Load voltage : Max. 30VDC • Load current : Max. 200mA • Residual voltage ☞ NPN : Max. 1V, PNP : Min. (Power supply -2.5V)					
Protection circuit		Short-circuit protection, reverse polarity protection					
Protection		IP66(IEC standard)					
Material		• BR ☞ Case : Brass, Cr-plate(BR-C : Ni plate), Lens : PC • BRP ☞ Case : Plastic (Black), Lens : PC			• Case ☞ BR3M:Brass, Cr-plate(BR-C:Ni plate), BRP3M:PA(Nylon, Black) • Lens ☞ PMMA	• Case ☞ Brass(Chromium plating) • Lens ☞ BR4M-Glass, BR2M-PC	

▣Connections

◎Diffuse reflective/Narrow beam reflective

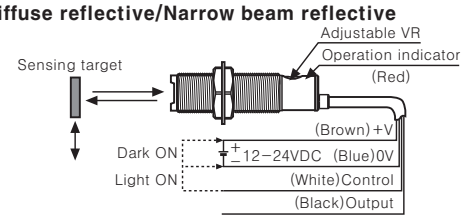

◎Retroreflective

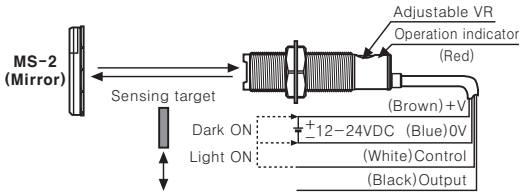

◎Through-beam

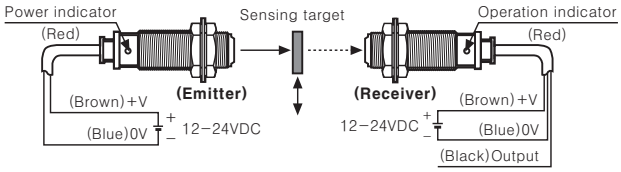

▣Feature data

◎Diffuse reflective/Narrow beam reflective

●BR100-DDT-□(-P) / BRP100-DDT-□(-P)　●BR200-DDTN-□(-P) / BRP200-DDTN-□(-P)　●BR400-DDT-□(-P) / BRP400-DDT-□(-P)

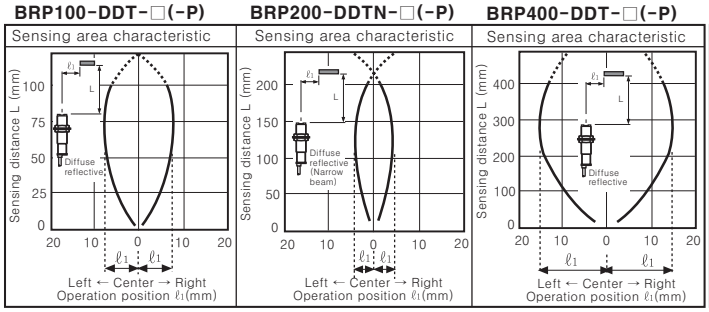

◎Relroreflective

●BR3M-MDT-□(-P) / BRP3M-MDT-□(-P)　※ —— : Operation level　····· : Stable operation level

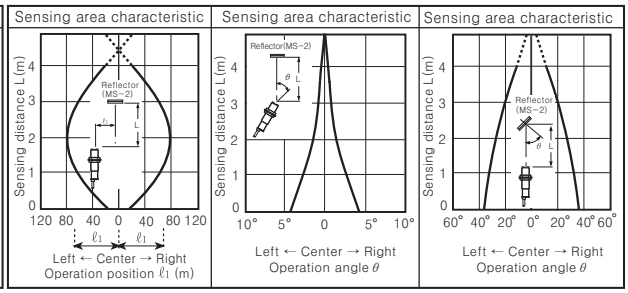

◎Through-beam

●BR4M-TDT□-□/ BR4M-TDT□-□-P

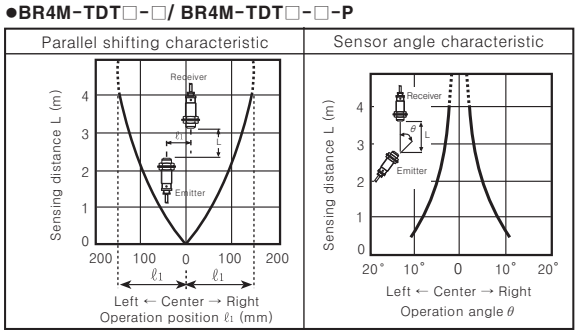

●BR20M-TDT□-□/ BR20M-TDT□-□-P

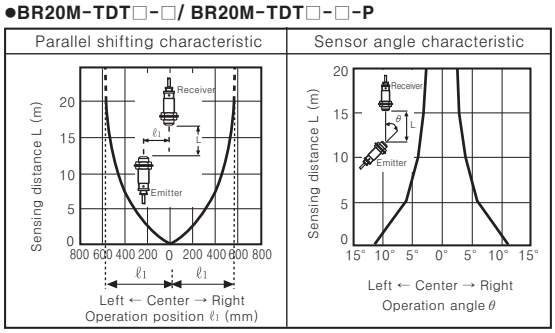

Reinforced plastic case U-shaped type photoelectric sensor(BUP Series)

▣Specifications

Model	NPN open collector output	BUP-30	BUP-30S	BUP-50	BUP-50S
	PNP open collector output	BUP-30-P	BUP-30S-P	BUP-50-P	BUP-50S-P
Appearances & Dimensions		CE [W52×H20×L72mm]		CE [W78.5×H20×L77.7mm]	
Sensing type		Through-beam			
Sensing distance		30mm		50mm	
Sensing target		Opaque materials of Min. ϕ4mm	Opaque materials of Min. ϕ1.5mm	Opaque materials of Min. ϕ4mm	Opaque materials of Min. ϕ1.5mm
Response time		Max. 1ms			
Power supply		12-24VDC ±10%(Ripple P-P : Max. 10%)			
Current consumption		Max. 30mA			
Light source		Infrared LED(940nm)			
Sensitivity adjustment		Fixed	Built-in VR	Fixed	Built-in VR
Operation mode		Selectable Light ON or Dark ON by control cable			
Control output		NPN or PNP open collector output • Load voltage : Max. 30VDC • Load current : Max. 200mA • Residual voltage ☞ NPN : Max. 1V, PNP : Min. (Power supply -2.5V)			
Protection circuit		Reverse polarity protection, short-circuit protection			
Indicator		Power indicator : Green LED, Operation indicator : Red LED			
Connection		4P, ϕ4mm, Length : 2m			

▣Connections

●Light ON

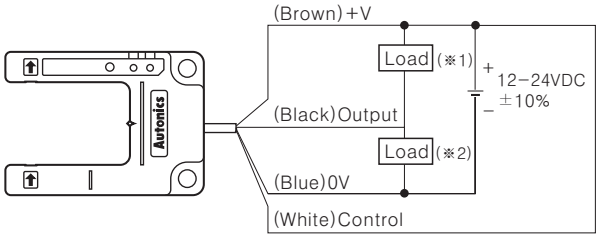

(※1): Load connection for NPN output
(※2): Load connection for PNP output

●Dark ON

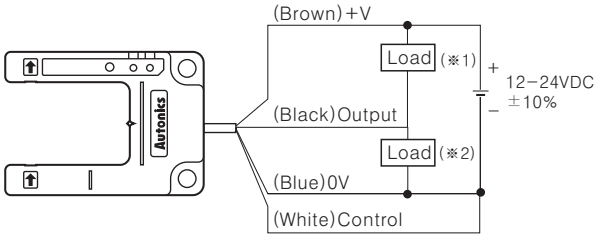

(※1): Load connection for NPN output
(※2): Load connection for PNP output

▣Dimensions

●BUP-30, BUP-30-P, BUP-30S, BUP-30S-P

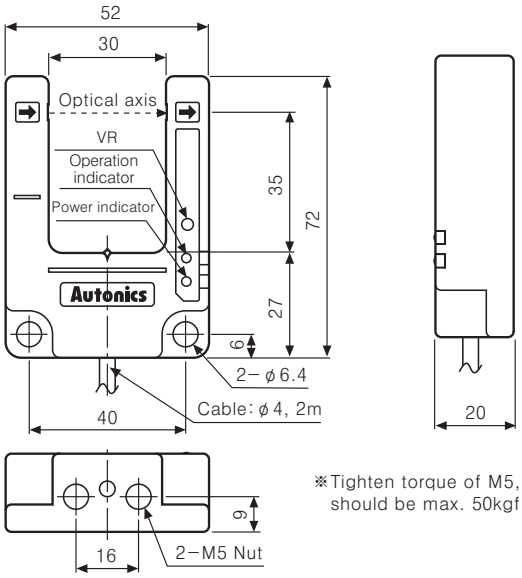

※Tighten torque of M5, M8 screw should be max. 50kgf · cm.

●BUP-50, BUP-50-P, BUP-50S, BUP-50S-P

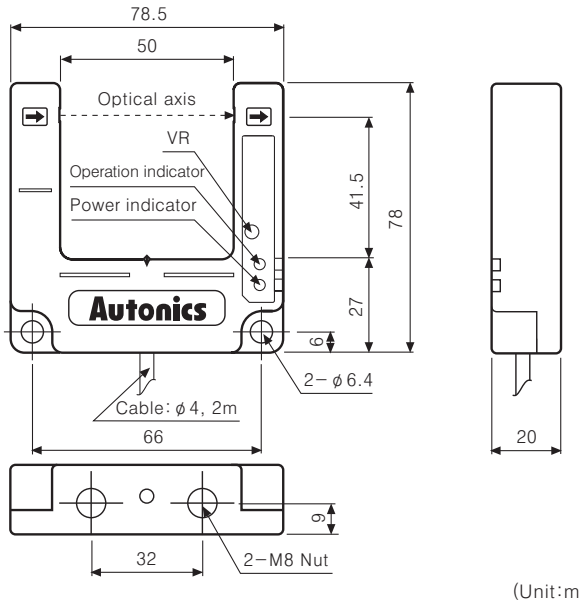

(Unit:mm)

Fiber optic sensor

▣Ordering information(Fiber optic amplifier)

BF 5 R – D 1 – N

NPN/PNP	N	NPN open collector output
Model type	1	Standard type
Display type	D	Dual display type
	S	Single display type
Light source	R	Red LED
Series	5	Series name
Item	BF	Fiber Sensor

BF 4 R P – E

Model type	No mark	Standard type
	E	External synchronization input type
	R	Remote sensitivity setting type
NPN/PNP	No mark	NPN open collector output
	P	PNP open collector output
Light source	R	Red LED
	G	Green LED
Series	4	Series name
Item	BF	Fiber Sensor

BF 3 RX – P

NPN/PNP	No mark	NPN open collector output
	P	PNP open collector output
Light source	RX	Red LED
Series	3	Series name
Item	BF	Fiber Sensor

▣Ordering information(Fiber optic cable)

F T □ – 4 20 – 10 □

Cable type	No mark	Standard type(−40 to 70℃)
	H	Heat−resistance(−40 to 105℃)
	H1	Heat−resistance(−40 to 150℃)
	H2	Heat−resistance(−40 to 250℃)
	R	Flexible type(1R)
	B	Break−resistant type(5R)
Fiber diameter	05	ϕ0.5mm
	06	ϕ0.6mm
	10	ϕ1.0mm
	13	ϕ1.3mm
	14	ϕ1.4mm
	15	ϕ1.5mm
	20	ϕ2.0mm
	F	ϕ0.5mm, ϕ0.25mm×4(Coaxial type)
	F1	ϕ0.5mm, ϕ0.25mm × 9(Coaxial type)
	F2	ϕ1.0mm, ϕ0.25mm× 16(Coaxial type)
Cable length	20	2m
Hood diameter	15	ϕ1.5mm
	2	ϕ2mm
	3	ϕ3mm
	4	ϕ4mm
	6	ϕ6mm
Head form	No mark	Standard type(Bolt type)
	P	Plastic type
	S	SUS type(SUS length 90mm)
	S1	SUS type(SUS length 35mm)
	S2	SUS type(SUS length 45mm)
	C	Cylinder type
	CS	Cylinder+SUS type(SUS length 15mm)
	LU	L type/Top view(Height 12.2mm)
	LU1	L type/Top view(Height 17.2mm)
	LU2	L type/Top view(Height 22.2mm)
	F	Flat type/Flat view
	FN	Flat type/Side view
	FU	Flat type/Top view(Up)
	FB	Flat type/Side view+top view(Bending)
Sensing type	T	Through−beam type
	D	Diffuse reflective type
Fiber material	F	Plastic fiber cable
	G	Glass fiber cable

※Please refer 23 to 28 page(Fiber optic cable specification) for exact model name of fiber optic cable, or it might cause wrong model selection not existed in the above ordering information.

Digital indicating type fiber optic sensor(BF5 Series)

▣Specifications

Model	Dual Display type	Single Display type
	BF5R-D1-N	**BF5R-S1-N**
Appearances & Dimensions	CE [W12×H32.8×L66mm]	
Light source	Red LED(660nm, modulated)	
Power supply	12-24VDC ±10%	
Current consumption	Max. 50mA	
Control output	NPN open collector (Sink current : Max. 100mA, Applied voltage : Max. 24V, Residual voltge : Max. 1V)	
Protection circuit	Reverse polarity protection, overcurrent protection, surge absorption	
Response time	Ultra Fast : 50㎲, Fast : 150㎲, STD : 500㎲, Long : 4 ms	Fast : 150㎲, STD : 500㎲, Long : 4 ms
Display	●Incident light level: Red, 4digit, 7Segment ●SV : Green, 4digit, 7Segment ●Main output indicator : Red LED	●Incident light level / SV : Red, 4digit, 7Segment ●Main output indicator : Red LED
Display function	Incident light level / SV display [4000/10000 resolution], Percentage display, Peak / Bottom value display, Normal / Reversed display	
Sensitivity setting	Auto tuning mode, 1 point teaching, 2 point teaching, Positioning teaching	Auto tuning
Mutual interference prevention	Max. 8 unit sets (Automatically set regardless of response time)	
Initializing	Initializing to factory mode	——
Power saving	Normal / Energy saving 1 / Energy saving 2	——
Timer	OFF, Off delay, On delay, One shot	OFF, 10ms off delay timer, 40ms off delay timer

▣Control output diagram and terminal connections

NPN open collector type	
Fiber optic sensor circuit	Connection

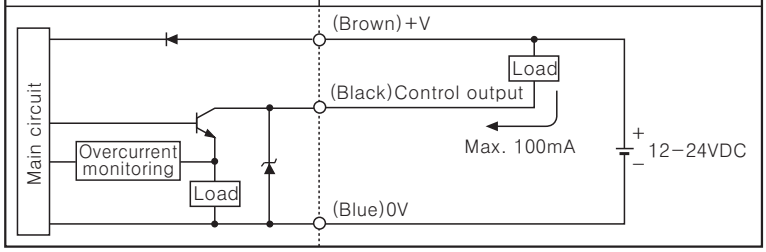

※Connect Diode at external terminal for inductive load.

▣Dimensions

●**BF5R-D1-N**

●**BF5R-S1-N**

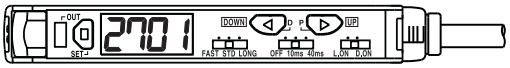

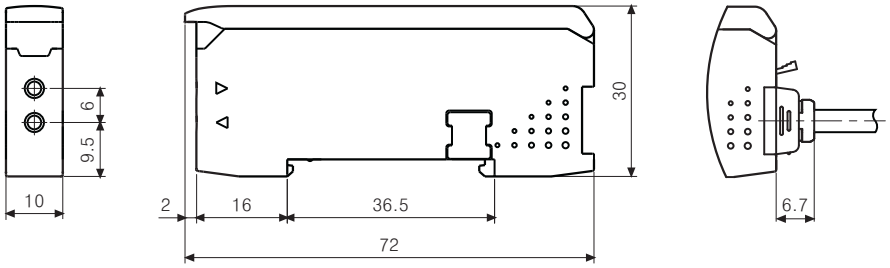

◎**Accessories**

●Connector type wire

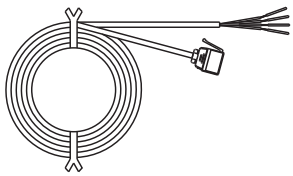

●Side connector

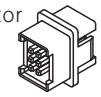

(Unit:mm)

Digital fiber optic amplifier communication converter(BFC Series)

▣Specifications

Model	NPN Solid-state input	PNP Solid-state input
	BFC-N	**BFC-P**
Appearances & Dimensions	CE NEW [W12×H32.8×L66mm]	
Power supply	**(※1)** 12-24VDC ±10%	
Current consumption	Max. 40mA	
SW input (SW1, SW2)	LOW : 0-1V, HIGH : 5-24V	
	SW1/SW2 - HH : Standby, HL : BANK0, LH : BANK1, LL : BANK2	SW1/SW2 - LL : Standby, LH : BANK0, HL : BANK1, HH : BANK2
Communication function	RS485 communication, serial communication, SW input	
Communication speed	1200, 2400, 4800, 9600, 19200, 38400bps	
Indication	●Parameter : Red 4digit 7 Segment ●Setting value : Green 4digit 7 Segment ●Indicator : TX indicator(Red), RX indicator(Green)	
Function	●Real-time monitoring (incident light level, on/off state) ●Executes every BF5 feature and sets parameter by external device(Master)	

(※1) Powered by supply voltage of the amplifier unit connected by a side connector.

▣Control output diagram and terminal connections

BFC-N

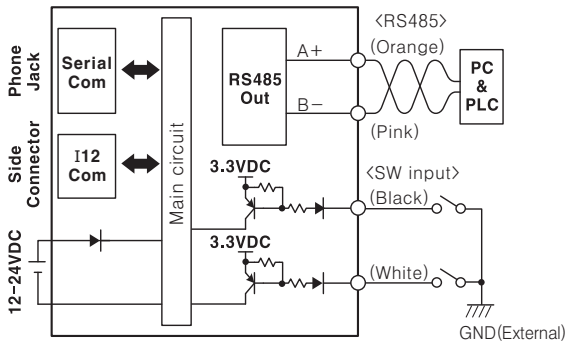

BFC-P

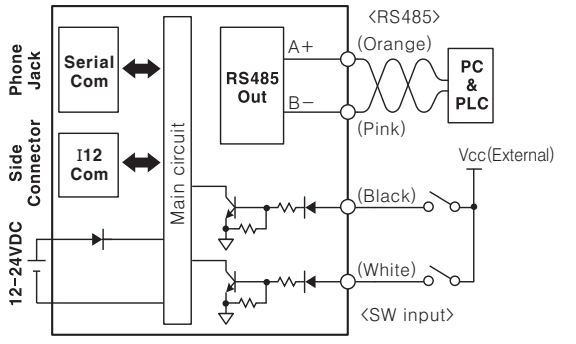

▣Dimensions

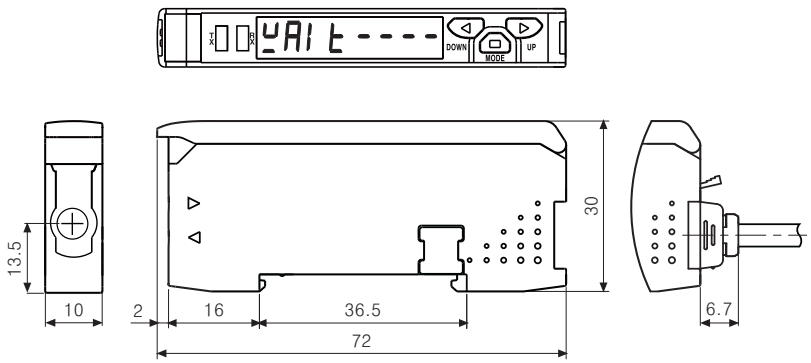

◎Accessories

●Connector type wire(Length:2m)

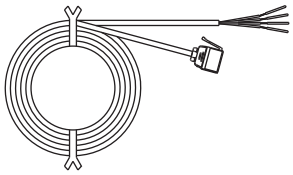

●Side connector

(Unit:mm)

High function fiber optic sensor(BF4R Series)

▣Specifications

Model	Standard type				External synchronization input type		Remote sensitivity setting type	
	BF4RP	BF4GP	BF4R	BF4G	BF4R-E	BF4G-E	BF4R-R	BF4G-R
Appearances & Dimensions	CE [W12×H32.8×L66mm]							
Response frequency	Max. 0.5ms(FREQ.1), Max. 0.7ms(FREQ.2)							
Power supply	12-24VDC ±10%, Ripple P-P : Max. 10%							
Current consumption	Max. 45mA							
Light source(Modulated)	Red LED	Green LED	Red LED	Green LED	Red LED	Green LED	Red LED	Green LED
Sensitivity adjustment	Sensitivity adjustment button(ON/OFF)							
Operation mode	Automatic selection of Light ON/Dark ON accordance with button setting							
Control output	PNP open collector output		NPN open collector output					
	Load current:Max. 100mA Applied voltage:Max. 30VDC Output voltage: Min. (Power supply -2.5)VDC		Load current : Max. 100mA, Load voltage:Max. 30VDC Residual voltage : Max. 1V(at 100mA load current), Max. 0.4V(at 16mA load current)					
Self-diagnosis output	ON state under unstable sensing(When the target stays for 300ms in unstable area), ON state when control output short-circuited							
	Load current:Max. 50mA Applied voltage:Max. 30VDC Output voltage:Min. (Power supply -2.5V)		Load current : Max. 50mA, Load voltage : Max. 30VDC Residual voltage : Max. 1V(at 50mA load current), Max. 0.4V(at 16mA load current)					
Protection circuit	Reverse power polarity, short-circuit(overcurrent) protection circuit							
Indicator	Operation indicator:Red LED, Stability indicator:Green LED ON when the target stays in stable sensing level							
Stop transmission function	———		———		Built-in		———	
External synchroni-zation function	———		———		Built-in(Gate/Trigger)		———	
Remote sensitivity setting function	———		———		———		Built-in	
Interference prevention function	(※1) Built-in selectable FREQ.1 or FREQ.2 by ON/OFF button							
Timer function (Selectable)	None / 40ms OFF delay timer(fixed)				———		None / 40ms OFF delay timer(fixed)	

(※1) Frequency1(Normal mode) : Max. 0.5ms, Frequency2 : Max. 0.7ms

▣Connections

●BF4R/BF4G

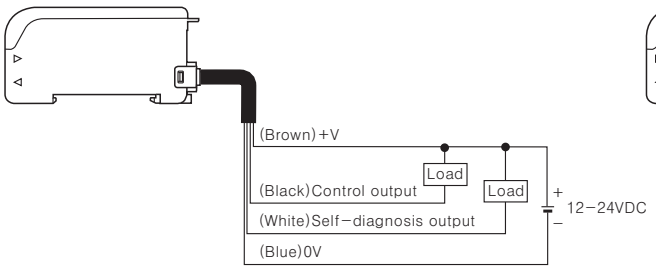

●BF4RP/BF4GP

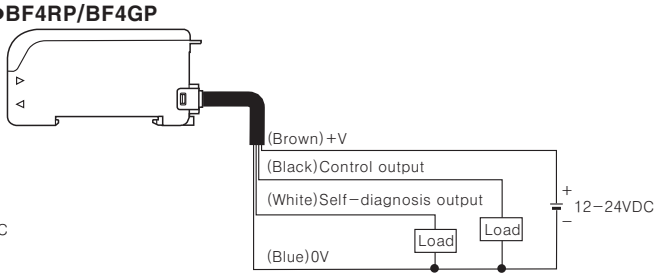

●BF4R-E/BF4G-E

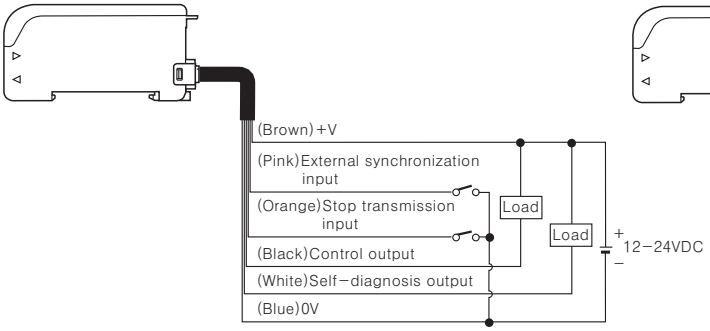

●BF4R-R/BF4G-R

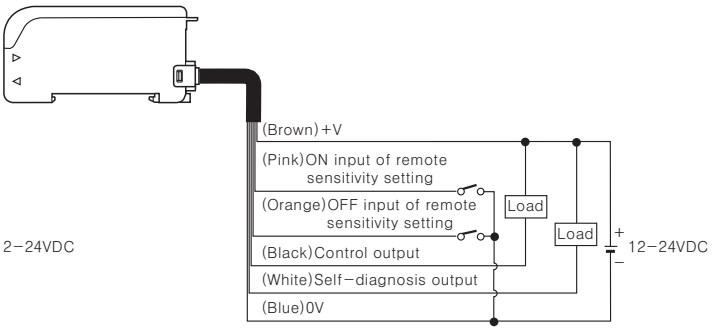

General purpose fiber optic sensor(BF3R Series)

▣Specifications

Model	BF3RX	BF3RX-P
Appearances & Dimensions	[W15×H39×L73mm]	
Response time	Max. 1ms	
Power supply	12-24VDC ±10%(Ripple P-P : Max. 10%)	
Current consumption	Max. 40mA	
Light source	Red LED(Modulated)	
Sensitivity adjustment	VR(Dual adjustment : Coarse adjustment, Fine adjustment)	
Operation mode	Selectable Light ON or Dark ON by control cable	
Control output	**●NPN open collector output** ☞ Load voltage : Max. 30VDC, Load current : Max. DC200mA, Residual voltage : Max. 1V	**●PNP open collector output** ☞ Output voltage : Min. (Power supply-2.5V) Load current : Max. DC200mA
Protection circuit	Reverse power polarity, short-circuit(overcurrent) protection circuit	
Indicator	Operation indicator : Red LED	
Connection	Outgoing cable 2m	

▣Connections

●BF3RX

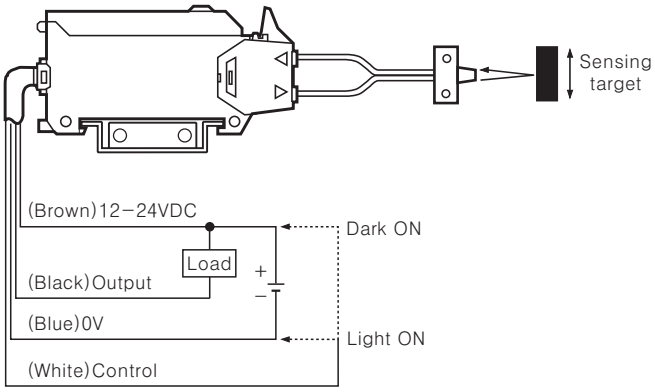

●BF3RX-P

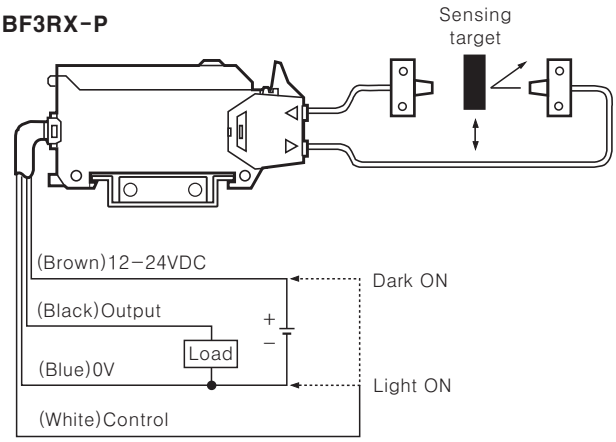

※Enable to use as diffuse reflective type or through-beam type according to the fiber optic cable.
※ Adapter marked fiber optic cable should be used with adapter( ).
※GT-420-13H2 can not be used because the length inserted into amp is too short.

▣Feature data

◎Through-beam

●BF3RX + FT-420-10

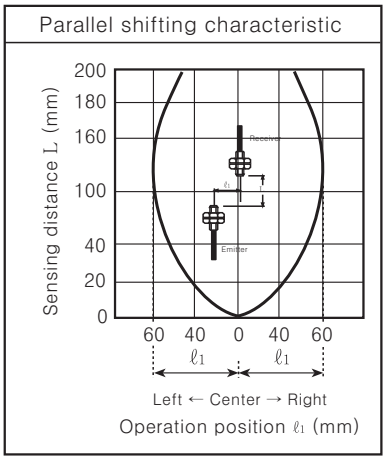

◎Diffuse reflective

●BF3RX + FD-620-10

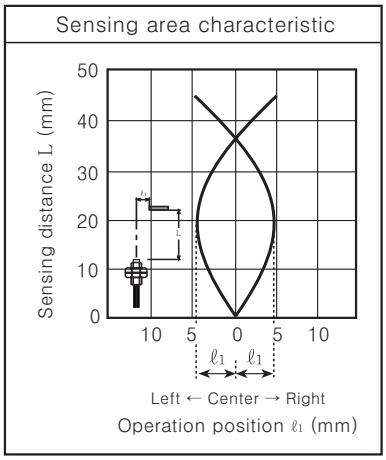

Fiber optic cable(Diffuse reflective)

Type	Appearance	Feature	Model	(Note1) Sensing distance (mm)	(Note2) Min. sensing target	Allowable bend radius	(Note3) Cable length(L)	Temperature
Flexible type	LINE-UP	Flat type/ Top view(Up)	**FDFU-210-05R**	30	ø0.0125	1R	1m Free cut	−40 to 60℃ (Humidity: 35 to 85% RH)
	LINE-UP	Flat type/ Side view	**FDFN-210-05R**					
	LINE-UP	Flat type/ Flat view	**FDF-210-05R**	15	ø0.04			
	LINE-UP	M3 Bolt	**FD-320-05R**	25	ø0.0125		2m Free cut	
	LINE-UP	M4 Bolt	**FD-420-05R**					
	LINE-UP	M6 Bolt	**FD-620-10R**	80	ø0.04			
Break-resistant type	LINE-UP	M3 Bolt	**FD-320-06B**	35	ø0.0125	5R		
	LINE-UP	ø3 Cylinder type	**FDC-320-06B**					
	LINE-UP	M4 Bolt	**FD-420-06B**					
	LINE-UP	M6 Bolt	**FD-620-13B**	100				
Standard type		M3 Bolt	**FD-320-05**	40	ø0.03	15R		−40 to 70℃ (Humidity: 35 to 85% RH)
		M4 Bolt	**FD-420-05**					
		ø3 Cylinder type	**FDC-320-05**					
		ø3 Cylinder type SUS type (90mm)	**FDCS-320-05**			15R (SUS part 10R)		
		M3 Bolt SUS type (90mm)	**FDS-320-05**					
		M3 Bolt SUS type (45mm)	**FDS2-320-05**					
		M4 Bolt SUS type (90mm)	**FDS-420-05**					
		M4 Bolt SUS type (45mm)	**FDS2-420-05**					
		M6 Bolt	**FD-620-10**	120		30R		
		M6 Bolt SUS type (90mm)	**FDS-620-10**			30R (SUS part 10R)		
		M6 Bolt SUS type (45mm)	**FDS2-620-10**					
		Plastic type	**FDP-320-10**			30R		

※**(Note1)** The sensing distance is a standard for Red LED of BF4 Series and 10% of Red LED is applied when it is Green LED. It is applied to 40% of sensing distance for BF3RX.

※**(Note2)** Min. sensing target is a value measured opaque material in accurate output status and the sensing distance is different with the rated sensing distance(Note1).

※**(Note3)** Fiber optic cable out of the rated length can be customizable.

※ **Free cut** The sensing distance can be shortened about max. 20% than the normal according to condition of the cable. [(FC−2) should be used for cutting fiber cable.]

Fiber optic cable(Diffuse felective)

Type	Appearance	Feature	Model	(Note1) Sensing distance (mm)	(Note2) Min. sensing target	Allowable bend radius	(Note3) Cable length(L)	Temperature
Coaxial type		M3 Bolt	**FD-320-F**	40	ϕ0.03	15R	2m Free cut	−40 to 70℃ (Humidity: 35 to 85% RH)
		M3 Bolt	**FD-320-F1**	60				
		M6 Bolt	**FD-620-F2**	120		30R		
Heat-resistant type		M6 Bolt	**FD-620-10H**			30R		−40 to 105℃
	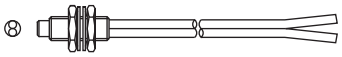	M6 Bolt	**FD-620-15H1**	160		50R		−40 to 150℃
		M4 Bolt Glass type	**GD-420-20H2**	100			2m	−40 to 250℃
	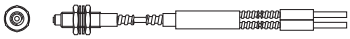	M6 Bolt Glass type	**GD-620-20H2**					

Fiber optic cable(Through-beam)

Type	Appearance	Feature	Model	(Note1) Sensing distance (mm)	(Note2) Min. sensing target	Allowable bend radius	(Note3) Cable length(L)	Temperature
Flexible type	LINE-UP	Flat type/ Top view(Up)	**FTFU-210-05R**	80	ϕ0.04	1R	1m Free cut	−40 to 60℃ (Humidity: 35 to 85% RH)
	LINE-UP	Flat type/ Side view	**FTFN-210-05R**	75				
	LINE-UP 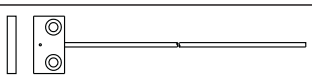	Flat type/ Flat view	**FTF-210-05R**	30				
	LINE-UP 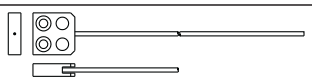	Flat type/ Side view+ top view	**FTFB-210-05R**	90				
	LINE-UP	Integrated bracket (L type)/ Top view(Up)	**FTLU-310-10R**	250	ϕ0.06			
			FTLU1-310-10R					
			FTLU2-310-10R					
	LINE-UP	M3 Bolt	**FT-320-05R**	85	ϕ0.3		2m Free cut	
	LINE-UP	ϕ2 Cylinder type	**FTC-220-05R**					
	LINE-UP 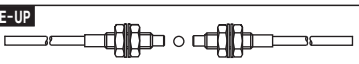	M4 Bolt	**FT-420-10R**	380	ϕ0.5			
Break-resistant type	LINE-UP	M3 Bolt	**FT-320-06B**	110	ϕ0.3	5R		
	LINE-UP	ϕ1.5 Cylinder type	**FTC-1520-06B**					
	LINE-UP 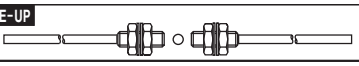	M4 Bolt	**FT-420-13B**	400	ϕ0.6			

※ **(Note1)** The sensing distance is a standard for Red LED of BF4 Series and 10% of Red LED is applied when it is Green LED. It is applied to 40% of sensing distance for BF3RX.

※ **(Note2)** Min. sensing target is a value measured opaque material in accurate output status and the sensing distance is different with the rated sensing distance(Note1).

※ **(Note3)** Fiber optic cable out of the rated length can be customizable.

※ Free cut The sensing distance can be shortened about max. 20% than the normal according to condition of the cable. [(FC−2) should be used for cutting fiber cable.]

※ Glass type is for BF5R, BF4R Series.

Fiber optic cable(Through-beam)

Type	Appearance	Feature	Model	(Note1) Sensing distance (mm)	(Note2) Min. sensing target	Allowable bend radius	(Note3) Cable length(L)	Temperature
Standard type		M3 Bolt	**FT-320-05**	150	ϕ0.5	15R	2m Free cut	−40 to 70℃ (Humidity: 35 to 85% RH)
	LINE-UP	ϕ1.5 Cylinder type	**FTC-1520-05**					
		ϕ2 Cylinder type	**FTC-220-05**					
		ϕ2 Cylinder type (90㎜)	**FTCS-220-05**			15R (SUS part 10R)		
		M3 Bolt SUS type (90㎜)	**FTS-320-05**					
		M3 Bolt SUS type (35㎜)	**FTS1-320-05**					
		M3 Bolt SUS type (45㎜)	**FTS2-320-05**					
		M4 Bolt	**FT-420-10**	500	ϕ1	30R		
		ϕ3 Cylinder type	**FTC-320-10**					
	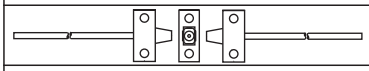	Plastic type	**FTP-320-10**					
		M4 Bolt SUS type (90㎜)	**FTS-420-10**			30R (SUS part 10R)		
		M4 Bolt SUS type (45㎜)	**FTS2-420-10**					
Heat-resistant type		M4 Bolt	**FT-420-10H**	300		30R		−40 to 105℃
		M4 Bolt	**FT-420-15H1**	500		50R		−40 to 150℃
		M4 Bolt Glass type	**GT-420-13H2**	400		25R	2m	−40 to 250℃

※**(Note1)** The sensing distance is a standard for Red LED of BF4 Series and 10% of Red LED is applied when it is Green LED. It is applied to 40% of sensing distance for BF3RX.

※**(Note2)** Min. sensing target is a value measured opaque material in accurate output status and the sensing distance is different with the rated sensing distance(Note1).

※**(Note3)** Fiber optic cable out of the rated length can be customizable.

※ Free cut The sensing distance can be shortened about max. 20% than the normal according to condition of the cable. [(FC−2) should be used for cutting fiber cable.]

※ Glass type is for BF5R, BF4R Series.

※FT−420−13 was discontinued. FT−420−13B is replacement.

Fiber optic cable

▣Dimensions

(Unit:mm)

Model	Diffuse reflective	Model	Through-beam
FDFU-210-05R M2-D0.5 ※Hood material :SUS304 Free cut	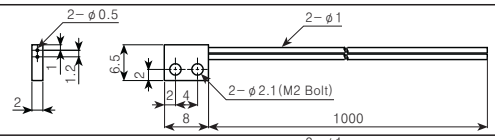	**FTFU-210-05R** M2-D0.5 ※Hood material :SUS304 Free cut	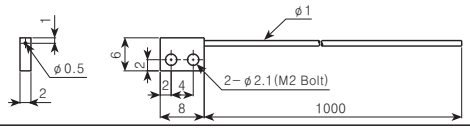
FDFN-210-05R M2-D0.5 ※Hood material :SUS304 Free cut	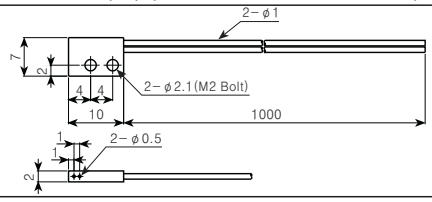	**FTFN-210-05R** M2-D0.5 ※Hood material :SUS304 Free cut	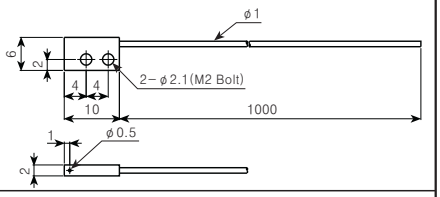
FDF-210-05R M2-D0.5 ※Hood material :SUS304 Free cut	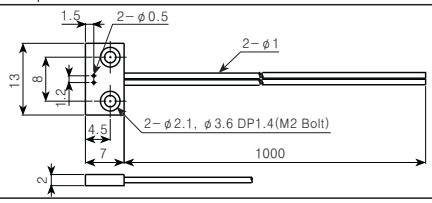	**FTF-210-05R** M2-D0.5 ※Hood material :SUS304 Free cut	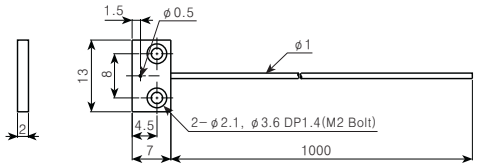
FD-320-05(R) M3-D0.5 Free cut Adapter	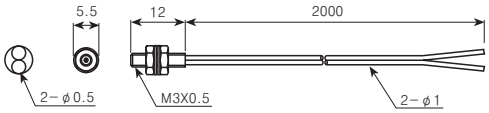	**FTFB-210-05R** M2-D0.5 ※Hood material :SUS304 Free cut	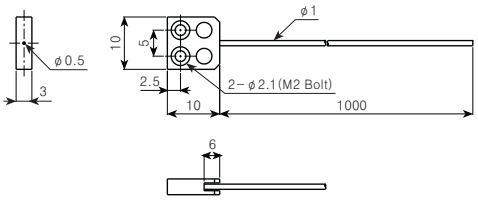
FD-320-06B M3-D0.6 Free cut Adapter	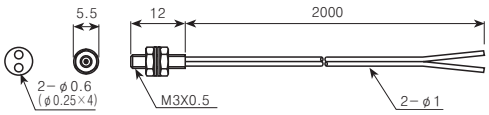		
FD-420-05(R) M4-D0.5 Free cut Adapter	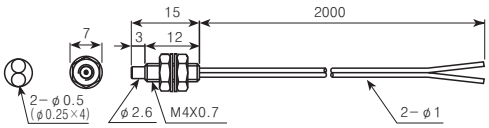	**FTLU-310-10R** **FTLU1-310-10R** **FTLU2-310-10R** M3-D0.5 ※Hood material :SUS304 Free cut	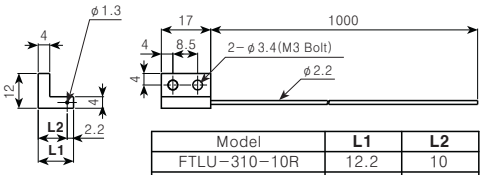 Model / L1 / L2 FTLU-310-10R / 12.2 / 10 FTLU1-310-10R / 17.2 / 15 FTLU2-310-10R / 22.2 / 20
FD-420-06B M4-D0.6 Free cut Adapter	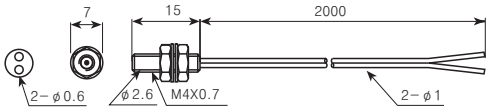		
FD-620-10(R) M6-D1.0 Free cut	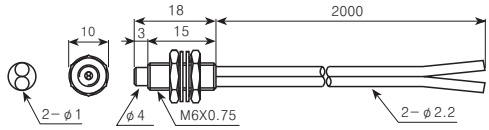	**FT-320-05(R)** M3-D0.5 Free cut Adapter	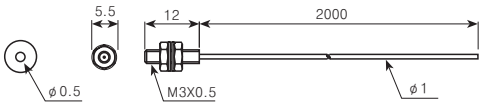
FD-620-13B M6-D1.3 Free cut	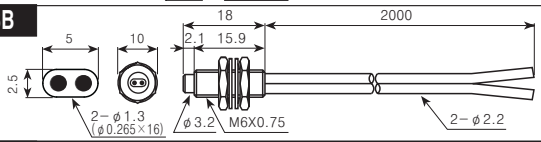	**FT-320-06B** M3-D0.6 Free cut Adapter	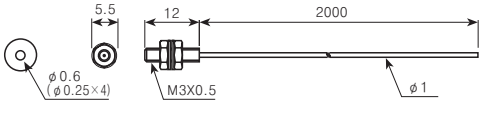
FDC-320-05 M3-D0.5 Free cut Adapter	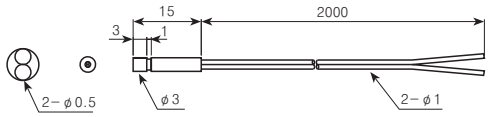	**FT-420-10** M4-D1.0 Free cut	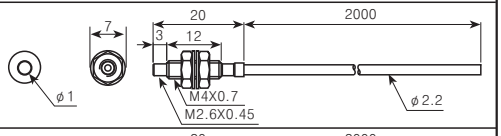
FDC-320-06B M3-D0.6 Free cut Adapter	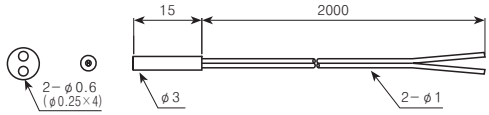	**FT-420-10R** M4-D1.0 Free cut	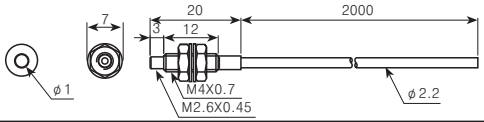
FDCS-320-05 ϕ3-D0.5 SUS ϕ1.5×15mm Free cut Adapter	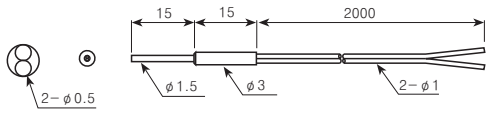	**FT-420-13B** M4-D1.3 Free cut	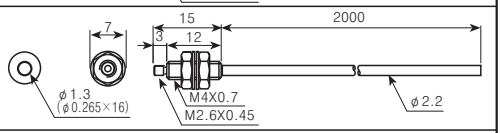
FDS-320-05 M3-D0.5 SUS ϕ1.5×90mm Free cut Adapter	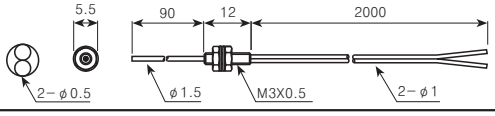	**FTC-1520-05** ϕ2-D0.5 Free cut Adapter	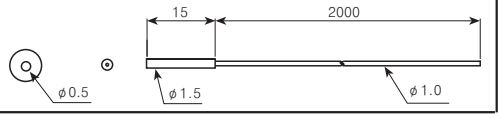

Fiber optic cable

▣Dimensions

(Unit:mm)

Model	Diffuse reflective	Model	Through-beam
FDS2-320-05 M3-D0.5 SUS ø1.5×45mm Free cut Adapter	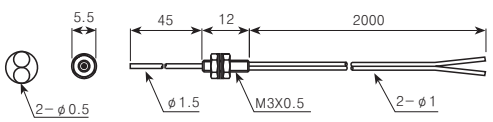	**FTC-1520-06B** ø2-D0.6 Free cut Adapter	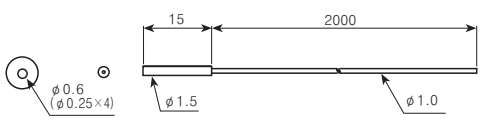
FDP-320-10 D1.0×2 Plastic Free cut	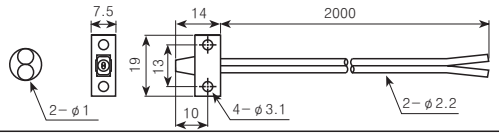	**FTC-220-05(R)** ø2-D0.5 Free cut Adapter	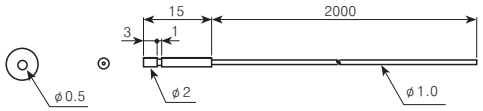
FDS-420-05 M4-D0.5 SUS ø1.5×90mm Free cut Adapter	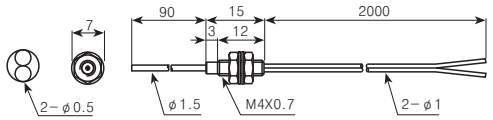	**FTCS-220-05** ø1.0-D0.5 SUS ø1×15mm Free cut Adapter	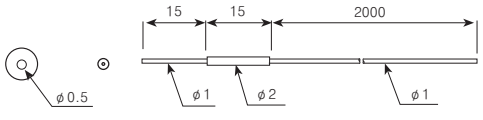
FDS2-420-05 M4-D0.5 SUS ø1.5×45mm Free cut Adapter	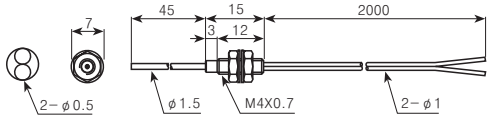	**FTC-320-10** ø3-D1.0 Free cut	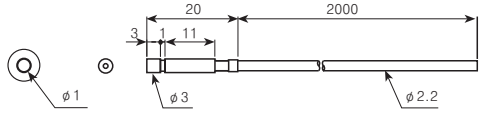
FDS-620-10 M6-D1.0 SUS ø2.5×90mm Free cut	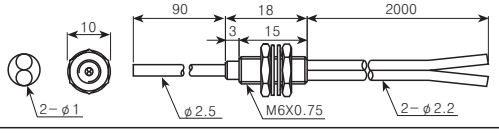	**FTS-320-05** M3-D0.5 SUS ø1.0×90mm Free cut Adapter	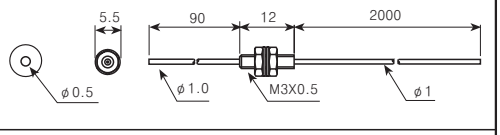
FDS2-620-10 M6-D1.0 SUS ø2.5×45mm Free cut	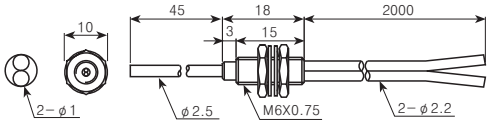	**FTS1-320-05** M3-D0.5 SUS ø1.0×35mm Free cut Adapter	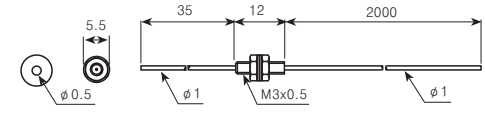
FD-320-F Co-axial M3 ø0.5, ø0.25×4 Free cut Adapter	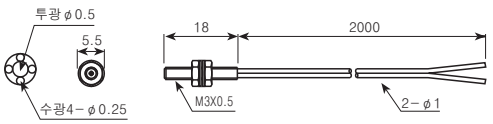	**FTS2-320-05** M3-D0.5 SUS ø1.0×45mm Free cut Adapter	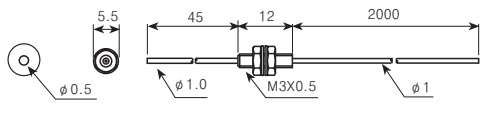
FD-320-F1 Co-axial M3 ø0.5, ø0.25×9 Free cut Adapter	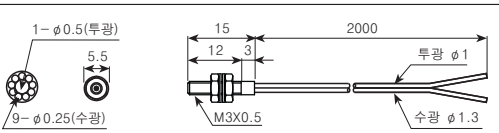	**FTP-320-10** D1.0 Plastic Free cut	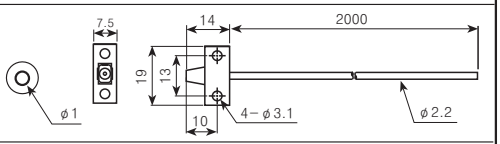
FD-620-F2 Co-axial M6 ø1.0 ø0.265×16 Free cut	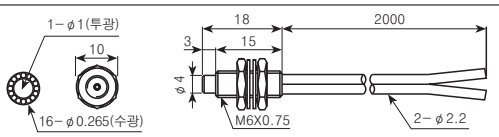	**FTS-420-10** M4-D1.0 SUS ø1.5×90mm Free cut	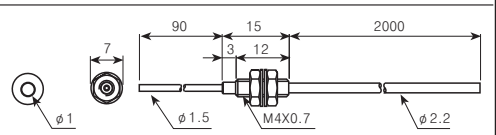
FD-620-10H M6-D1.0 Heat Resistant 105℃ Free cut	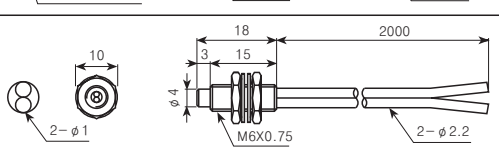	**FTS2-420-10** M4-D1.0 SUS ø1.5×45mm Free cut	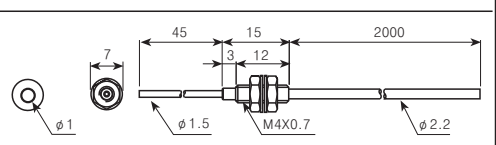
FD-620-15H1 M6-D1.5 Heat Resistant 150℃ Free cut	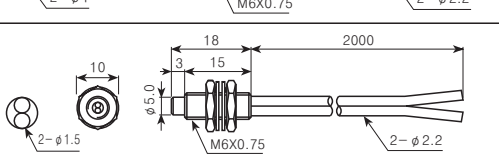	**FT-420-10H** M4-D1.0 Heat RESISTANT 105℃ Free cut	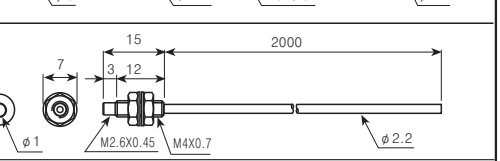
GD-420-20H2 M4-D0.05×1000 Heat Resistant 250℃	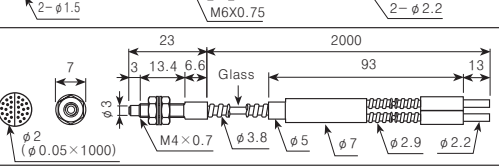	**FT-420-15H1** M4-D1.0 Heat Resistant 150℃ Free cut	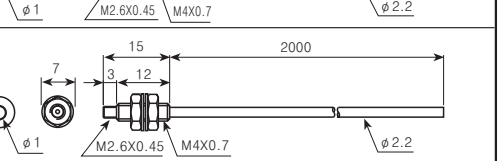
GD-620-20H2 M6-D0.05×1000 Heat Resistant 250℃	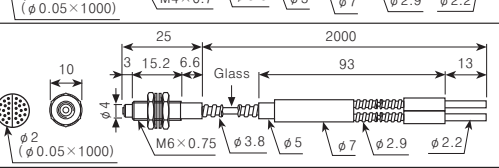	**GT-420-13H2** M4-D1.3 Heat Resistant Max.250℃ Glass	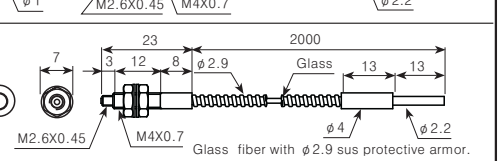

▣Lens unit for long distance detection(Sold separately)

◎Model : **FTL-M26**

〈Lens unit〉 〈Mounting at cable〉

◎Mounting of lens
Mount the lens unit on the 3mm projecting point of the front hood

◎Ambient temperature range of lens unit
Able to use within −40 to 100℃.
(Disable to use over 100℃.)

◎Applicable fiber optic cable and max. mounting distance
FT-420-10 : 2500mm
FT-420-10H : 1500mm

◎Dimensions

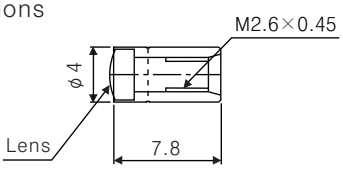

(Unit:mm)

▣Micro spot fiber optic cable and lens unit(Sold separately)

◎Model
Fiber optic cable : **FDC-320-F**
Micro spot lens : **FDC-2**

◎Feature data

Measuring method	Beam spot characteristic

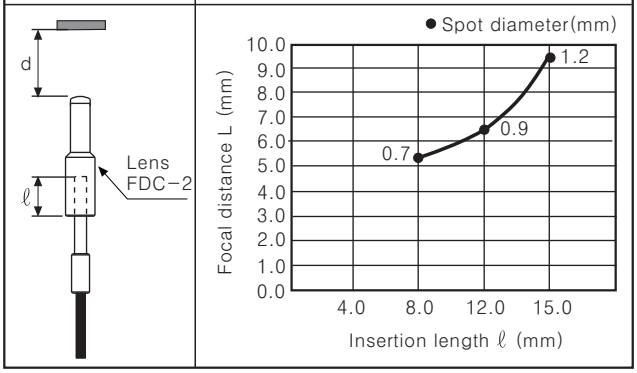

◎Ambient temperature range of lens unit
It should be used within −40 to 100℃.
(It cannot be used over 100℃.)

◎Dimensions

●**FDC-320-F**

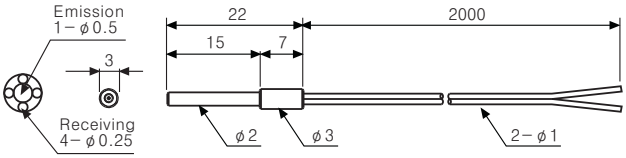

●**FDC-2**

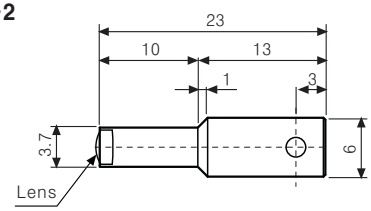

(Unit:mm)

▣Protection tube for fiber optic cable (Sold separately)

◎Usage : Protect cable from impact or cutting

(Unit:mm)

Model	Dimension
FTH-310	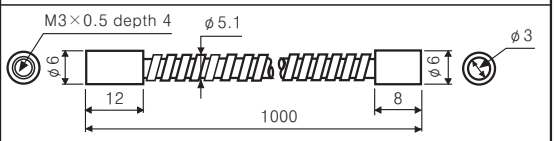
FTH-410	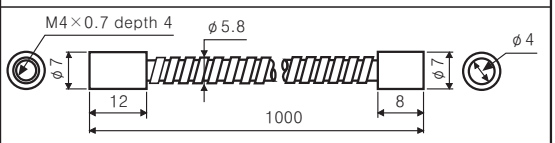
FDH-610	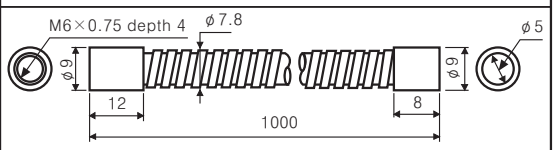

※500mm tube can be customized.
※Additional 8mm is for tube coupling.

▣Accessory

◎Fiber cutter

Usage : Cutting fiber optic cable, free cut type

●FC-2

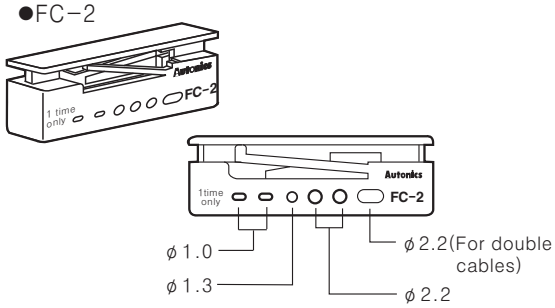

◎Adapter

Adapter : Adapter marked fiber optic cable should be used with adapter .

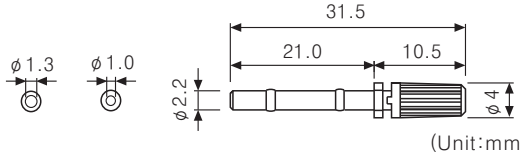

(Unit:mm)

※The inside diameter ϕ1.0(Standard and black)
The inside diameter ϕ1.3(Only applied to the receiver of FD-320-F1 and dark gray.)

Door sensor(ADS-A Series)

▣Specifications

Model	ADS-AF	ADS-AE
Appearances & Dimensions	[W224×H60×L26mm]	
Cover color	Silver	
Power supply	24-240VAC ±10% 50/60Hz, 24-240VDC ±10%(Ripple P-P : Max. 10%)	12-24VAC ±10% 50/60Hz, 12-24VDC ±10%(Ripple P-P : Max. 10%)
Power consumption	Max. 4VA(at 240VAC)	Max. 2VA(at 24VAC)
Control output	(※1) Relay contact output [Relay contact capacity : 50VDC 0.1A(Resistive load) / Relay contact composition : 1a	
Relay life cycle	Mechanical : Min. 20,000,000 times, Electrical : Min. 50,000 times	
Mounting height	2.0m to 2.7m(Max. sensing distance : 3m)	
Sensing method	Infrared reflection method(Diffuse reflective)	
Output delay time	Time delay approx. 0.5sec.	
Output holding time	Selectable 2sec., 7sec., 15sec. by holding time setting switch	
Interference prevention	H, L(Interference prevention switch)	
Front sensing area	7.5˚, 14.5˚, 21.5˚, 28.5˚: Using angle adjuster	
Adjustable sensing area	(1, 2, 3 Area), (7, 8, 9 Area) Eliminate each by each : Adjusting with eliminating right/left sensing area lever	
Light source	Infrared chip diode(modulated)	
Indicator	Normal : Green LED turns on, Detection : Red LED turns on	
Connection method	Connector wire connection	

(※1)Do not use Load which is beyond the rated capacity of contact point of Relay.
It may cause bad insulation, contact fusion, bad contact, relay breakdown and fire etc.

▣Parts description

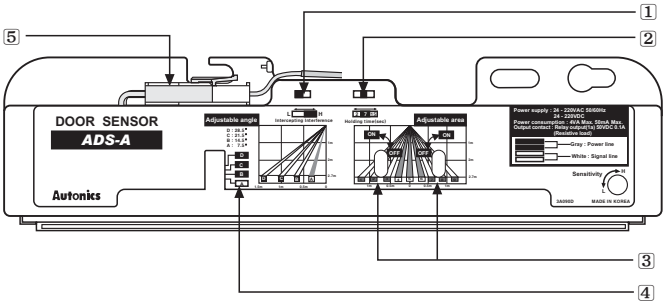

1 Interference prevention switch
2 Holding time setting switch
3 Eliminate right/left sensing area lever
4 Angle adjuster
5 Body connector

▣Dimensions

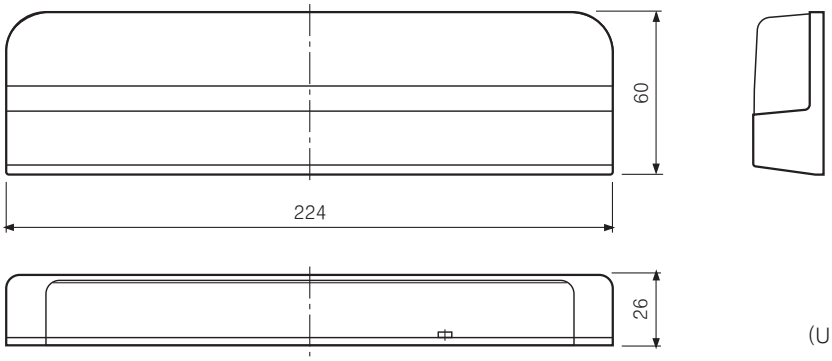

(Unit:mm)

Door side sensor(ADS-SE Series)

■Specifications

Model	ADS-SE
Appearances & Dimensions	[W77×H30×L44mm]
Sensing type	Through-beam
Sensing distance	0 to 10m
Power supply	12V-24VAC/DC ±10%(Ripple P-P : Max. 10%)
Power/Current consumption	AC : Max. 2VA / DC : Max. 50mA
Contact output	Contact capacity : 50VDC 0.3A(Resistive load) Contact composition : 1c Relay life cycle : Mechanical-Min. 5,000,000 times, Electrical-Min. 100,000 times
Response time	Approx. 50ms(From light OFF)
Output holding time	Approx. 500ms(From light ON)
Available sensor set	2sets
Indicator	Operation indicator : Green / Red
Light source	Infrared LED(850nm)
Sensor wire length	10m

■Connections

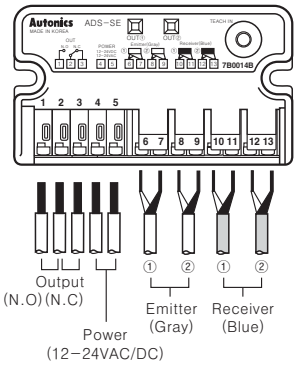

■Identification

●Controller part

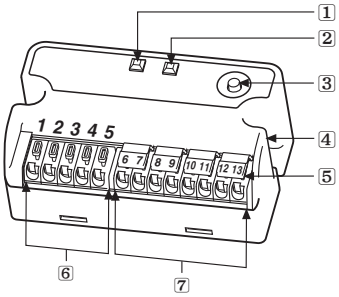

1 Display LED(Red)
2 Display LED(Green)
3 Sensitivity setting button
4 Mounting hole
5 Wiring connection button
6 Terminal for power and output(No. 1 to 5)
7 Terminal for emitter/receiver of sensor (No. 6 to 13)

●Sensor part

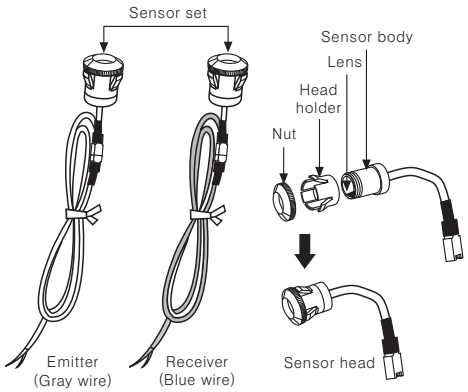

※It is able to use 2 sets of the sensor with this product. If it is necessary, purchase one more set for using.

■Dimensions

●Controller part

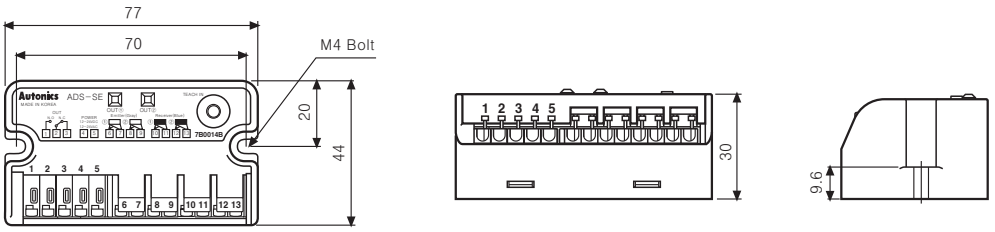

〈ADS-SEC〉 ※It is able to purchanse a controller(ADS-SEC) separately.

●Sensor part

• One push type

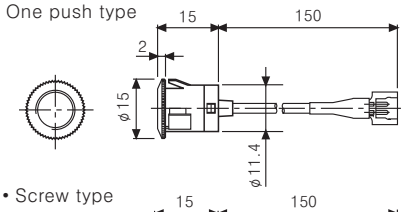

• Screw type

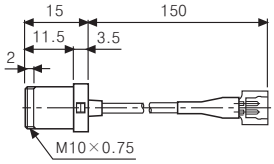

●Option

• Sensor set

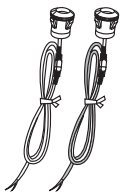

〈ADS-SH〉

• Bracket

〈For mounting by One push〉

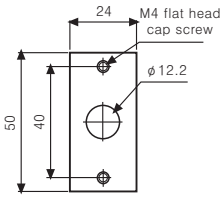

〈ADS-SB12〉

〈For mounting by One Screw 〉

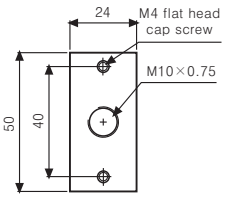

〈ADS-SB10〉

(Unit:mm)

Area sensor(BW Series)

▣Ordering information

BW 20 - 08 P

Solid state output	No mark	NPN open collector output
	P	PNP open collector output
Number of optical axis	04 to 48pcs	
Optical axis pitch	20	20mm pitch
	40	40mm pitch
Series	BW	Area sensor

▣Specifications

Model	NPN open collector output (Standard type)	BW20-08 BW20-12 BW20-16 BW20-20 BW20-24 BW20-28 BW20-32 BW20-36 BW20-40 BW20-44 BW20-48	BW40-04 BW40-06 BW40-08 BW40-10 BW40-12 BW40-14 BW40-16 BW40-18 BW40-20 BW40-22 BW40-24
	PNP open collector output	BW20-08P BW20-12P BW20-16P BW20-20P BW20-24P BW20-28P BW20-32P BW20-36P BW20-40P BW20-44P BW20-48P	BW40-04P BW40-06P BW40-08P BW40-10P BW40-12P BW40-14P BW40-16P BW40-18P BW40-20P BW40-22P BW40-24P
Appearances & Dimensions		CE ●Optical axis pitch : 20mm [W28.6×H22.6×L□mm]	CE ●Optical axis pitch : 40mm [W28.6×H22.6×L□mm]
Sensing type		Through-beam	
Sensing distance		0.1 to 7m	
Sensing target		Opaque materials of Min. ϕ30mm	Opaque materials of Min. ϕ50mm
Optical axis pitch		20mm	40mm
Number of optical axis		8 to 48pcs	4 to 24pcs
Sensing width		140 to 940mm	120 to 920mm
Response time		Max. 12ms	
Power supply		12-24VDC ±10%(Ripple P-P : Max. 10%)	
Current consumption		Emitter : Max. 80mA, Receiver : Max. 80mA	
Light source		Infrared LED(850nm)	
Operation mode		Light ON fixed	
Control output		• NPN open collector output ☞ Load voltage:Max. 30VDC, Load current:Max. 100mA, Residual voltage:Max. 1V • PNP open collector output ☞ Load current:Max. 100mA, Output voltage:Min.(Power supply-2.5)V	
Short-circuit protection		Built-in	
Synchronization type		Synchronized by synchronous line	
Self-diagnosis		Ambient light monitoring, Emitter/Receiver light circuit monitoring, Output circuit monitoring	
Interference protection		Interference protection by master/slave function	

▣Input/Output circuit and connection diagram

●NPN open collector output

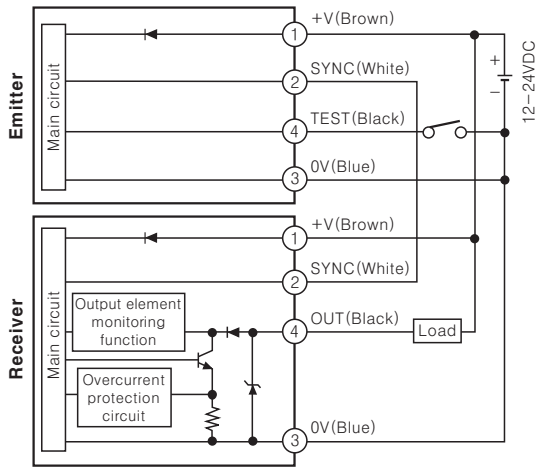

●PNP open collector output

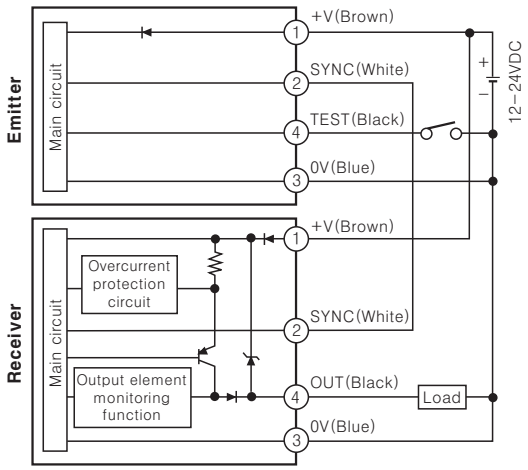

Area sensor(BW Series)

▣Dimensions

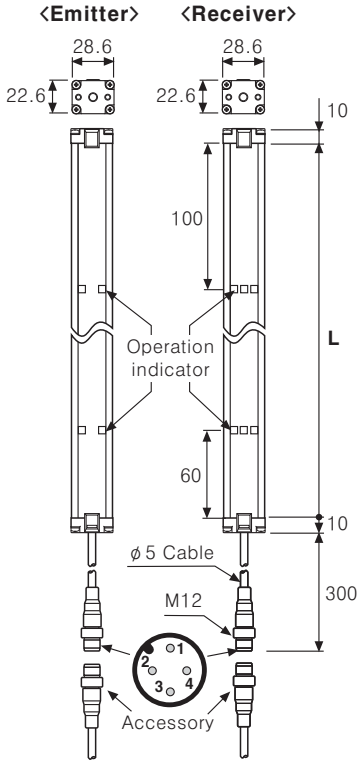

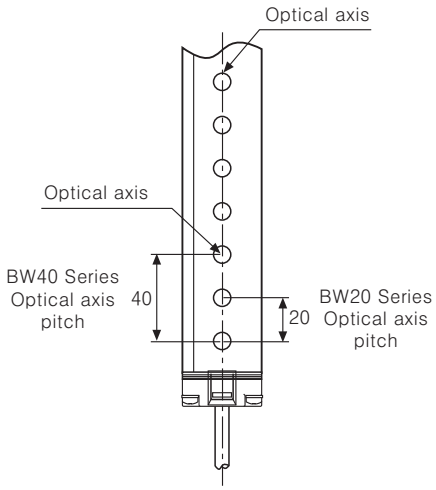

Model	L(mm)	Model	L(mm)
BW20-08(P)	160mm	BW20-32(P)	640mm
BW40-04(P)		BW40-16(P)	
BW20-12(P)	240mm	BW20-36(P)	720mm
BW40-06(P)		BW40-18(P)	
BW20-16(P)	320mm	BW20-40(P)	800mm
BW40-08(P)		BW40-20(P)	
BW20-20(P)	400mm	BW20-44(P)	880mm
BW40-10(P)		BW40-22(P)	
BW20-24(P)	480mm	BW20-48(P)	960mm
BW40-12(P)		BW40-24(P)	
BW20-28(P)	560mm		
BW40-14(P)			

〈 Operation indicator 〉

LED color	Emitter	Receiver
Green	POWER	ON
Yellow	TEST(M/S)	UNSTABLE
Red	———	OFF

〈 Wiring Connection 〉

Pin No.	Cable color	Emitter	Receiver
1	Brown	12-24VDC	12-24VDC
2	White	SYNC	SYNC
3	Blue	0V	0V
4	Black	TEST(M/S)	OUT

●Bracket A

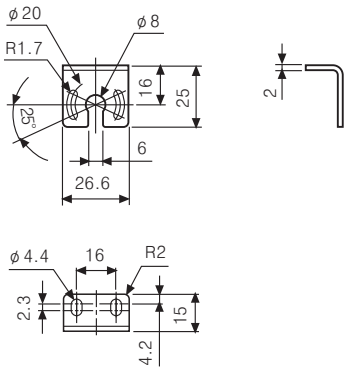

●Bracket B

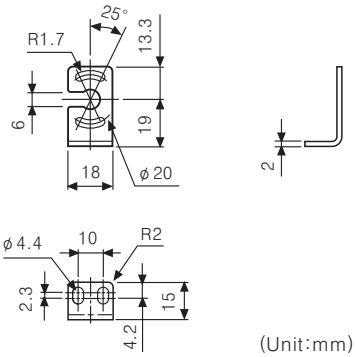

(Unit:mm)

▣Connecting cable(Sold separately)

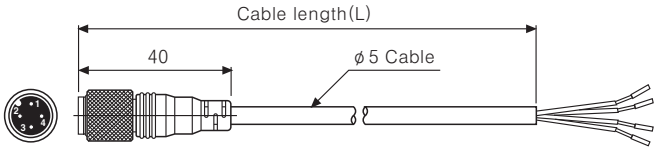

(Unit:mm)

Model	Cable length(L)	Connector color
CID4-3T CID4-3R	3m	Emitter(T) : Black Receiver(R) : Gray
CID4-5T CID4-5R	5m	
CID4-7T CID4-7R	7m	
CID4-10T CID4-10R	10m	

※Connecting cable is sold separately.

▣Feature data

Parallel shifting characteristic

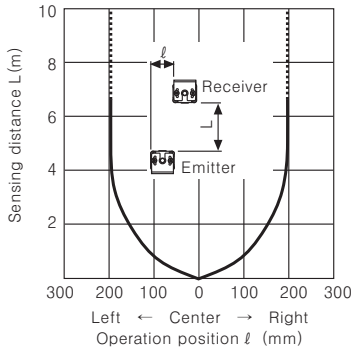

Sensor angle characteristic

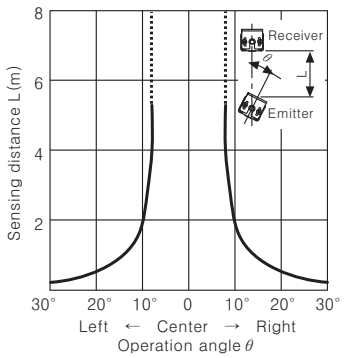

Plastic case area sensor(BWP Series)

▣Ordering information

BWP 20 – 08 P

Output	No mark	NPN open collector output
	P	PNP open collector output
Number of optical axis	Number	8, 12, 16, 20 axis
Optical axis pitch	20	20mm pitch
Plastic case area sensor		

▣Specifications

Model					
NPN open collector output		BWP20-08	BWP20-12	BWP20-16	BWP20-20
PNP open collector output		BWP20-08P	BWP20-12P	BWP20-16P	BWP20-20P
Appearances & Dimensions		CE ※Plastic case type [W30×H□×L13mm] Optical axis : 20mm			
Sensing type		Through-beam			
Sensing distance		0.1 to 5m			
Sensing target		Opaque materials of Min. ϕ30mm			
Optical axis pitch		20mm			
Number of optical axis		8pcs	12pcs	16pcs	20pcs
Sensing width		140mm	220mm	300mm	380mm
Response time		Max. 6ms(Max. 7ms when selecting frequency B)			
Power supply		12-24VDC ±10%(Ripple P-P:Max. 10%)			
Current consumption		Emitter : Max. 80mA, Receiver : Max. 80mA			
Light source		Infrared LED(850nm)			
Operation mode		Light ON/Dark ON			
Control output		●NPN open collector output ☞ Load voltage:Max. 30VDC, Load current:Max. 150mA, Residual voltage:Max. 1VDC ●PNP open collector output ☞ Load current:Max. 150mA, Output voltage:Min.(Power supply-2.5)VDC			
Short-circuit protection		Built-in			
Synchronization type		Synchronized by synchronous line			
Interference protection		Anti-interference by transmittance frequency selection			

▣Input/Output circuit and connection diagram

●NPN open collector output type

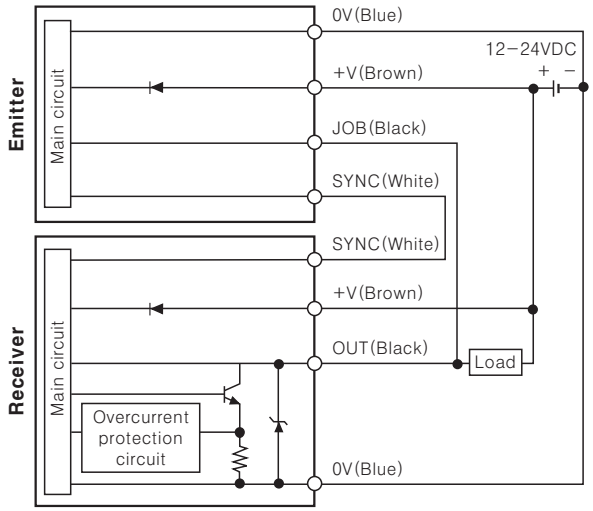

●PNP open collector output type

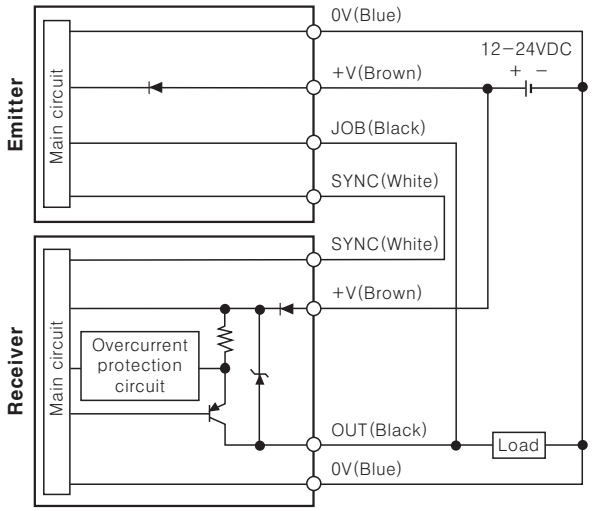

※If the receiver OUT(Black) line and the emitter JOB(Black) line are not connected each other, the JOB indicator of the emitter is not operated and maintain the light status.

Plastic case area sensor(BWP Series)

▣Dimensions

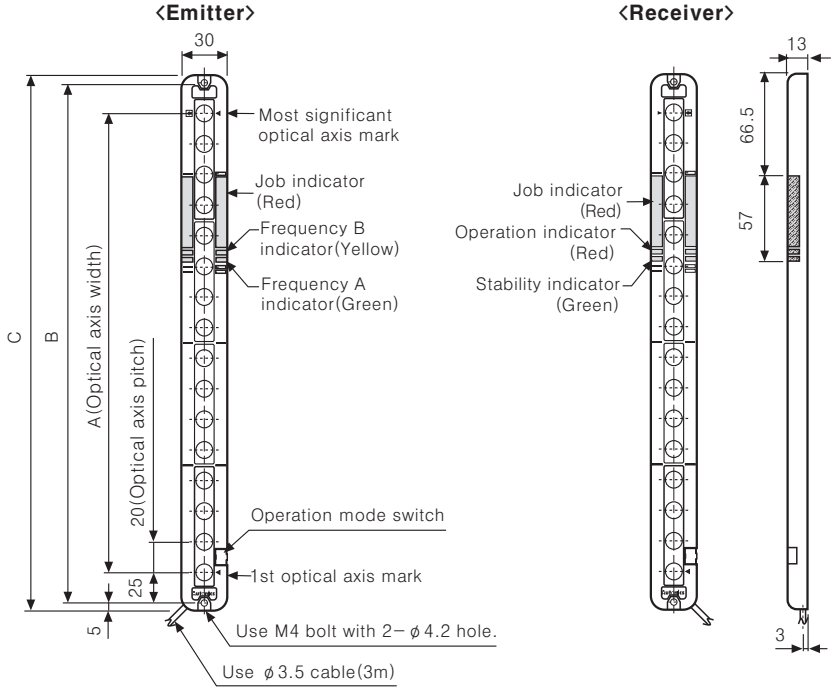

Application model	A	B	C
BWP20-08	140	180	190
BWP20-12	220	260	270
BWP20-16	300	340	350
BWP20-20	380	420	430

◎Mounting of bracket

(Unit:mm)

●BK-BWP-ST(Parallel or bracket)
Sold separately

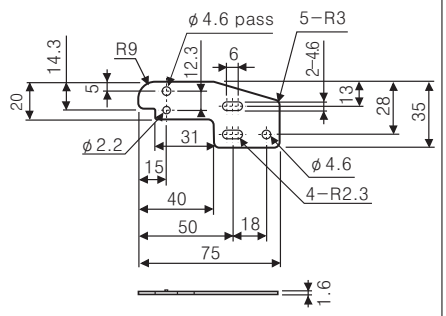

●BK-BWP-L(L-Shaped bracket)
Sold separately

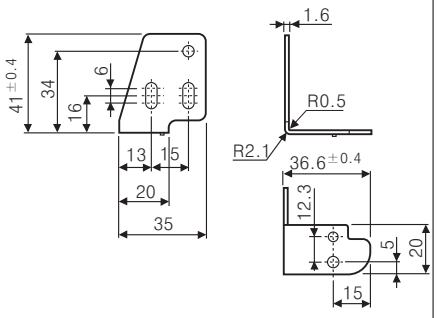

●BK-BWP-P□(Protection bracket)
Sold separately

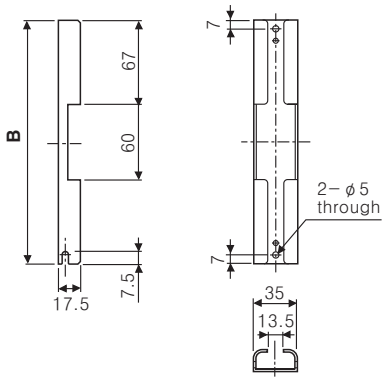

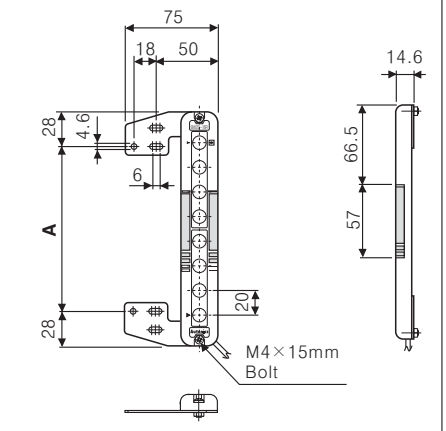

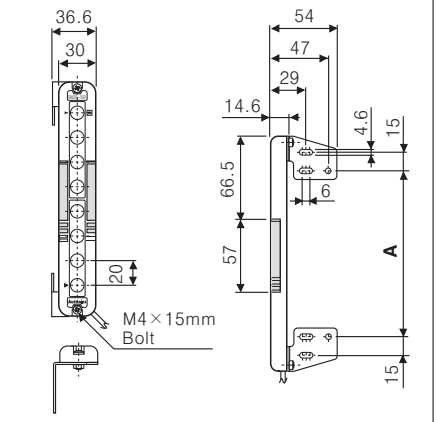

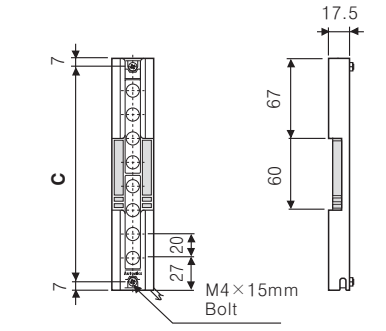

※It is able to mount parallel or L-shaped bracket together.

Model	A[mm]	B[mm]	BK-BWP-P		
			Name of bracket	C[mm]	D[mm]
BWP20-08	134	160	BK-BWP-P08	194	180
BWP20-12	214	240	BK-BWP-P12	274	260
BWP20-16	294	320	BK-BWP-P16	354	340
BWP20-20	374	400	BK-BWP-P20	434	420

※Bracket is sold separately.

Slim body picking sensor(BWPK Series)

▣Ordering information

BWPK 25 – P

Output	No mark	NPN open collector output
	P	PNP open collector output
Optical axis pitch	25	25mm pitch
Series	BWPK	Picking sensor

▣Specifications

Model	NPN open collector output	**BWPK25-05**
	PNP open collector output	**BWPK25-05P**
Appearances & Dimensions		CE [W30×H140×L9.9mm]
Sensing type		Through-beam
Sensing distance	Long-mode	0.1 to 3m
	Short-mode	0.05 to 1m
Sensing target		Opaque materials of Min. ϕ35mm
Optical axis pitch		25mm
Number of optical axis		5 pcs
Detecting width		100mm
Response time		Max. 30ms
Power supply		12-24VDC ±10%(Ripple P-P : Max. 10%)
Current consumption		Emitter : Max. 60mA, Receiver : Max. 60mA
Operation mode		Switching of Light ON/Dark ON
Control output		●NPN open collector output ☞ Load voltage:Max. 30VDC, Load current:Max. 150mA, Residual voltage:Max. 1V ●PNP open collector output ☞ Load current:Max. 150mA, Output voltage:Min.(Power supply-2.5)V
Short-circuit protection		Built-in
Protection circuit		Reverse power polarity, Output short-circuit(Overcurrent) protection
Light source		Infrared LED(850nm)
Interference protection		Interference protection by transmission frequency selection

▣Input/Output circuit and connection diagram

●NPN open collector output type

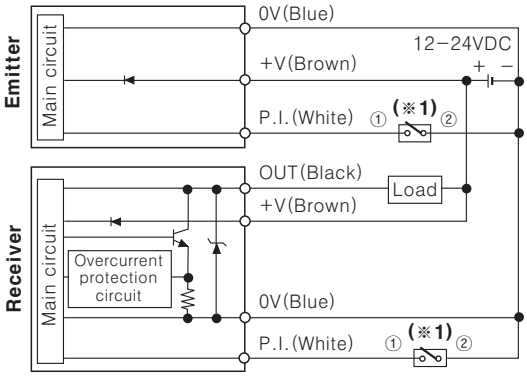

(※1) Picking input(P.I) : Contact or transistor are ON.
Picking indicator us operated.

<Contact> <NPN transistor>

●PNP open collector output type

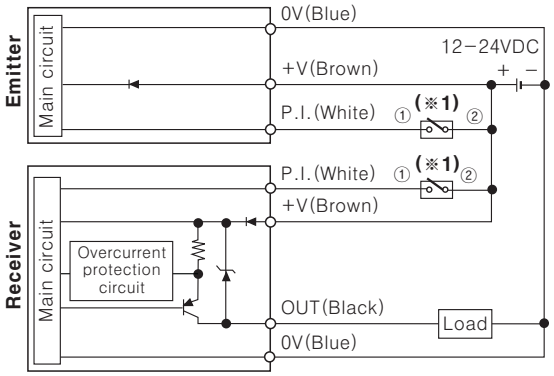

(※1) Picking input(P.I) : Contact or transistor are ON.
Picking indicator us operated.

<Contact> <NPN transistor>

※Picking indicator:When external picking input(P.I) is short-circuited with OUT(Black), it is operated same as ON/OFF status of control output.

Slim body picking sensor(BWPK Series)

▣Dimensions

(Unit:mm)

◎Product dimension

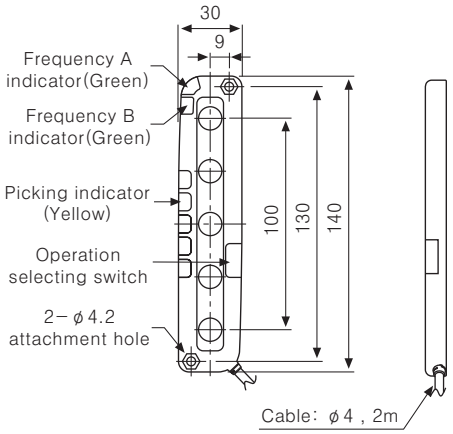

<Emitter>

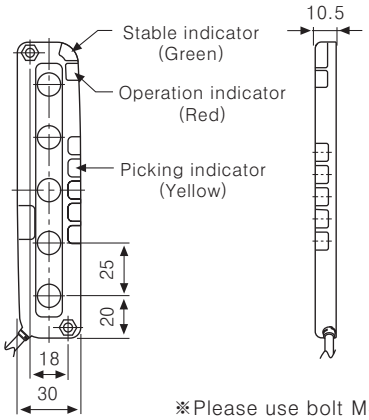

<Receiver>

※Please use bolt M4 for mounting of sensor, set the tightening torque under 20kgf·cm.

◎Bracket mounting dimension

●Connect the bracket A

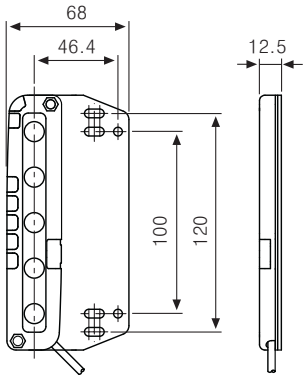

●Connect the bracket L

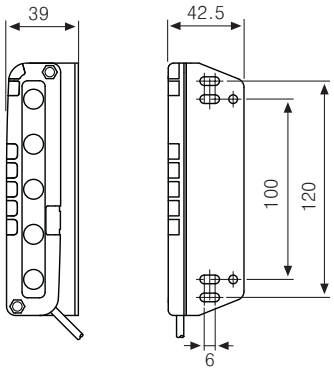

●Connect the protection bracket

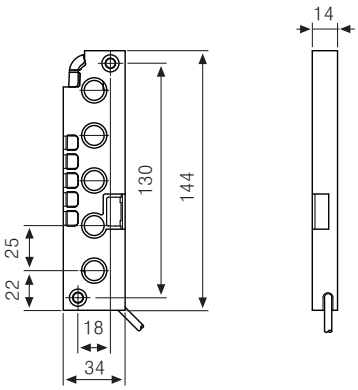

◎Bracket dimension(Sold separately)

●Bracket A(BK-BWPK-ST)

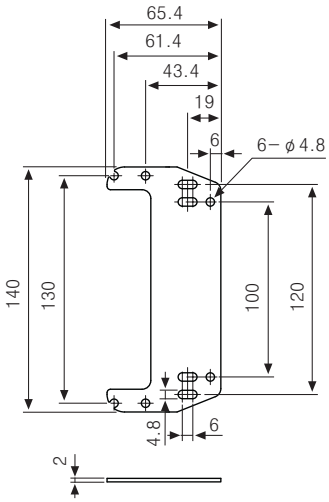

●Bracket B(BK-BWPK-L)

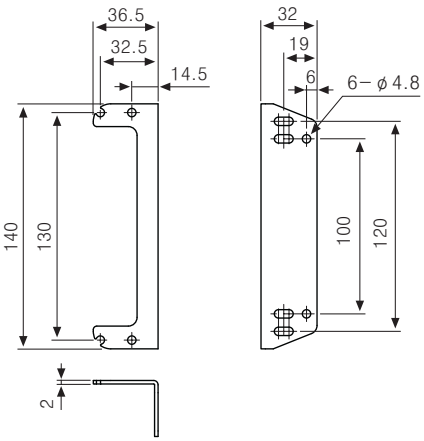

●Protection bracket(BK-BWPK-P)

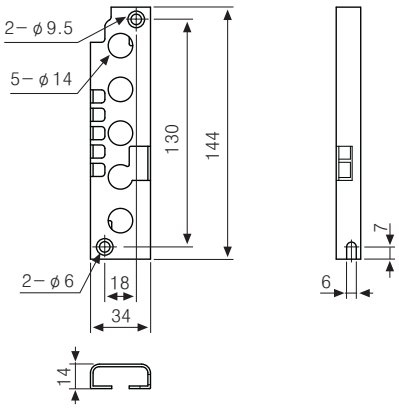

Proximity sensor

▣Ordering information(Cylindrical type)

P R □ □ □ □ 18 – 8 D N – □

	No mark	Standard type
1)	I	IEC standard
	V	Oil resistant cable
	IV	Oil resistant cable(IEC standard)
Output type	N	NPN NO
	N2	NPN NC
	P	PNP NO
	P2	PNP NC
2)	O	Normal Open
	C	Normal Close
Voltage	D	12–24VDC
	A	100–240VAC
Dimension	Number	Standard sensing distance(mm)
	Number	Diameter of head(mm)
Wire	No mark	DC 3–wire type, AC 2–wire type
	T	DC 2–wire type
Body size	No mark	Standard type
3)	S	Short body
	L	Long body
Connection	No mark	Cable outgoing type
1)	CM	Connector type
1)	W	Cable outgoing connector type
Feature	No mark	Standard type
	A	Spatter resistance type
	D	Long sensing distance type
Shape	R	Cylindrical type
Sensing type	P	Inductive proximity sensor
	C	Capacitive proximity sensor

1)IEC standard item is available and add "–I" to the end of model.
2)Normal Open, Normal Close output are only for DC 2–wire and AC 2–wire type.
3)Short type is only for DC 3–wire of PR12 type.

▣Ordering information(Rectangular type)

P S □ 17 – 5 D N □ – □

Frequency	No mark	Standard type
1)	F	Differential frequency type
Sensing position	No mark	Standard type
2)	U	Upside sensing type
Output type	N	NPN NO
	N2	NPN NC
	P	PNP NO
	P2	PNP NC
3)	O	Normal Open
	C	Normal Close
4)	N3	NPN NO+NC
	P3	PNP NO+NC
Voltage	D	12–24VDC(AS type:12–48VDC)
	A	100–240VAC
Sensing distance	Number	Standard sensing distance(mm)
Dimension	Number	Side length of head(mm)
Output	No mark	DC 3–wire type, AC 2–wire type
5)	T	DC 2–wire type
Shape	S	Square
	SN	Square new design
	FI	Flat type(Injection case)
Sensing type	P	Inductive proximity sensor
	A	Inductive long distance proximity sensor

1)Differential frequency type is only for PSN17 type.
2)Upper sensing type is only for PS12, PSN17 type.
3)Normal Open, Normal Close output are only for DC 2–wire and AC 2–wire type.
4)N3, P3 output is only for AS80 type.
5)DC 2–wire type is only for PSN17 type.

Proximity sensor

▣Long distance cylindrical DC 2-wire type (Power:12-24VDC)

CE

Appearance		Appearance Classification				Model	Sensing distance (mm)		Response frequency (Hz)
		Standard type		Long type					
		Shield	Non Shield	Shield	Non Shield		Shield	Non shield	
M12	Normal type					PRDT12-4DO PRDT12-4DC	4		450
						PRDT12-8DO PRDT12-8DC		8	400
						PRDLT12-4DO PRDLT12-4DC	4		450
						PRDLT12-8DO PRDLT12-8DC		8	400
	Cable outgoing connector type					PRDWT12-4DO PRDWT12-4DC	4		450
						PRDWT12-8DO PRDWT12-8DC		8	400
M18	Normal type					PRDT18-7DO PRDT18-7DC	7		250
						PRDT18-14DO PRDT18-14DC		14	200
						PRDLT18-7DO PRDLT18-7DC	7		250
						PRDLT18-14DO PRDLT18-14DC		14	200
	Connector type					PRDCMT18-7DO PRDCMT18-7DC	7		250
						PRDCMT18-14DO PRDCMT18-14DC		14	200
						PRDCMLT18-7DO PRDCMLT18-7DC	7		250
						PRDCMLT18-14DO PRDCMLT18-14DC		14	200
	Cable outgoing connector type					PRDWT18-7DO PRDWT18-7DC	7		250
						PRDWT18-14DO PRDWT18-14DC		14	200
	Spatter resistance type					PRDAT18-7DO PRDAT18-7DC	7		250
	Spatter resistance cable outgoing connector type					PRDAWT18-7DO PRDAWT18-7DC	7		250
M30	Normal type					PRDT30-15DO PRDT30-15DC	15		100
						PRDT30-25DO PRDT30-25DC		25	100
						PRDLT30-15DO PRDLT30-15DC	15		100
						PRDLT30-25DO PRDLT30-25DC		25	100
	Connector type					PRDCMT30-15DO PRDCMT30-15DC	15		100
						PRDCMT30-25DO PRDCMT30-25DC		25	100
						PRDCMLT30-15DO PRDCMLT30-15DC	15		100
						PRDCMLT30-25DO PRDCMLT30-25DC		25	100
	Cable outgoing connector type					PRDWT30-15DO PRDWT30-15DC	15		100
						PRDWT30-25DO PRDWT30-25DC		25	100
	Spatter resistance type					PRDAT30-15DO PRDAT30-15DC	15		100
	Spatter resistance cable outgoing connector type					PRDAWT30-15DO PRDAWT30-15DC	15		100

▶IEC standard connector type is available. Please add "-I" to the end of model for an order.

Proximity sensor

▣Cylindrical DC 2-wire type (Power:12-24VDC)

CE

Appearance		Appearance Classification				Model	Sensing distance (mm)		Response frequency (Hz)
		Standard type		Long type					
		Shield	Non Shield	Shield	Non Shield		Shield	Non shield	
M08	Normal type					PRT08-1.5DO PRT08-1.5DC	1.5		1500
						PRT08-2DO PRT08-2DC		2	1000
	Cable outgoing connector type	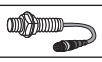				PRWT08-1.5DO PRWT08-1.5DC	1.5		1500
						PRWT08-2DO PRWT08-2DC		2	1000
M12	Normal type					PRT12-2DO PRT12-2DC	2		1500
						PRT12-4DO PRT12-4DC		4	500
	Connector type					PRCMT12-2DO PRCMT12-2DC	2		1500
						PRCMT12-4DO PRCMT12-4DC		4	500
	Cable outgoing connector type	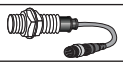				PRWT12-2DO PRWT12-2DC	2		1500
						PRWT12-4DO PRWT12-4DC		4	500
	Spatter resistance type					PRAT12-2DO PRAT12-2DC	2		1500
	Spatter resistance cable outgoing connector type					PRAWT12-2DO PRAWT12-2DC	2		1500
M18	Normal type					PRT18-5DO PRT18-5DC	5		500
						PRT18-8DO PRT18-8DC		8	350
	Connector type					PRCMT18-5DO PRCMT18-5DC	5		500
						PRCMT18-8DO PRCMT18-8DC		8	350
	Cable outgoing connector type	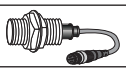				PRWT18-5DO PRWT18-5DC	5		500
			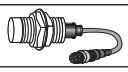			PRWT18-8DO PRWT18-8DC		8	350
	Spatter resistance type					PRAT18-5DO PRAT18-5DC	5		500
	Spatter resistance cable outgoing connector type					PRAWT18-5DO PRAWT18-5DC	5		500
M30	Normal type					PRT30-10DO PRT30-10DC	10		400
						PRT30-15DO PRT30-15DC		15	200
	Connector type					PRCMT30-10DO PRCMT30-10DC	10		400
						PRCMT30-15DO PRCMT30-15DC		15	200
	Cable outgoing connector type	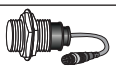				PRWT30-10DO PRWT30-10DC	10		400
			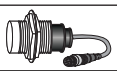			PRWT30-15DO PRWT30-15DC		15	200
	Spatter resistance type					PRAT30-10DO PRAT30-10DC	10		400
	Spatter resistance cable outgoing connector type					PRAWT30-10DO PRAWT30-10DC	10		400

▶IEC standard connector type is available. Please add "-I" to the end of model for an order.

Proximity sensor

▣Long distance cylindrical DC 3-wire type (Power:12-24VDC)

CE

Appearance		Appearance Classification				Model	Sensing distance (mm)		Response frequency (Hz)
		Standard type		Long type					
		Shield	Non Shield	Shield	Non Shield		Shield	Non shield	
M12	Normal type					PRD12-4DN PRD12-4DP PRD12-4DN2 PRD12-4DP2	4		500
						PRD12-8DN PRD12-8DP PRD12-8DN2 PRD12-8DP2		8	400
						PRDL12-4DN PRDL12-4DP PRDL12-4DN2 PRDL12-4DP2	4		500
						PRDL12-8DN PRDL12-8DP PRDL12-8DN2 PRDL12-8DP2		8	400
	Connector type					PRDCM12-4DN PRDCM12-4DP PRDCM12-4DN2 PRDCM12-4DP2	4		500
						PRDCM12-8DN PRDCM12-8DP PRDCM12-8DN2 PRDCM12-8DP2		8	400
						PRDCML12-4DN PRDCML12-4DP PRDCML12-4DN2 PRDCML12-4DP2	4		500
						PRDCML12-8DN PRDCML12-8DP PRDCML12-8DN2 PRDCML12-8DP2		8	400
	Cable outgoing connector type	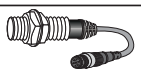				PRDW12-4DN PRDW12-4DP PRDW12-4DN2 PRDW12-4DP2	4		500
			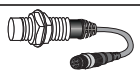			PRDW12-8DN PRDW12-8DP PRDW12-8DN2 PRDW12-8DP2		8	400
				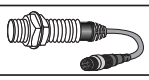		PRDWL12-4DN PRDWL12-4DP PRDWL12-4DN2 PRDWL12-4DP2	4		500
					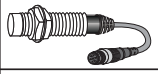	PRDWL12-8DN PRDWL12-8DP PRDWL12-8DN2 PRDWL12-8DP2		8	400
M18	Normal type					PRD18-7DN PRD18-7DP PRD18-7DN2 PRD18-7DP2	7		300
						PRD18-14DN PRD18-14DP PRD18-14DN2 PRD18-14DP2		14	200
				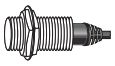		PRDL18-7DN PRDL18-7DP PRDL18-7DN2 PRDL18-7DP2	7		300
					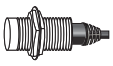	PRDL18-14DN PRDL18-14DP PRDL18-14DN2 PRDL18-14DP2		14	200
	Connector type					PRDCM18-7DN PRDCM18-7DP PRDCM18-7DN2 PRDCM18-7DP2	7		300
						PRDCM18-14DN PRDCM18-14DP PRDCM18-14DN2 PRDCM18-14DP2		14	200
						PRDCML18-7DN PRDCML18-7DP PRDCML18-7DN2 PRDCML18-7DP2	7		300
					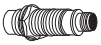	PRDCML18-14DN PRDCML18-14DP PRDCML18-14DN2 PRDCML18-14DP2		14	200
	Cable outgoing connector type					PRDW18-7DN PRDW18-7DP PRDW18-7DN2 PRDW18-7DP2	7		300
						PRDW18-14DN PRDW18-14DP PRDW18-14DN2 PRDW18-14DP2		14	200
						PRDWL18-7DN PRDWL18-7DP PRDWL18-7DN2 PRDWL18-7DP2	7		300
						PRDWL18-14DN PRDWL18-14DP PRDWL18-14DN2 PRDWL18-14DP2		14	200

Proximity sensor

▣Long distance cylindrical DC 3-wire type (Power:12-24VDC)

CE

Appearance		Appearance Classification				Model	Sensing distance (mm)		Response frequency (Hz)
		Standard type		Long type					
		Shield	Non Shield	Shield	Non Shield		Shield	Non shield	
M30	Normal type					PRD30-15DN PRD30-15DP PRD30-15DN2 PRD30-15DP2	15		100
						PRD30-25DN PRD30-25DP PRD30-25DN2 PRD30-25DP2		25	100
				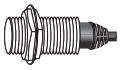		PRDL30-15DN PRDL30-15DP PRDL30-15DN2 PRDL30-15DP2	15		100
					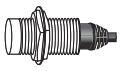	PRDL30-25DN PRDL30-25DP PRDL30-25DN2 PRDL30-25DP2		25	100
	Connector type					PRDCM30-15DN PRDCM30-15DP PRDCM30-15DN2 PRDCM30-15DP2	15		100
						PRDCM30-25DN PRDCM30-25DP PRDCM30-25DN2 PRDCM30-25DP2		25	100
				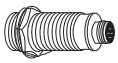		PRDCML30-15DN PRDCML30-15DP PRDCML30-15DN2 PRDCML30-15DP2	15		100
					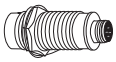	PRDCML30-25DN PRDCML30-25DP PRDCML30-25DN2 PRDCML30-25DP2		25	100
	Cable outgoing connector type					PRDW30-15DN PRDW30-15DP PRDW30-15DN2 PRDW30-15DP2	15		100
						PRDW30-25DN PRDW30-25DP PRDW30-25DN2 PRDW30-25DP2		25	100
						PRDWL30-15DN PRDWL30-15DP PRDWL30-15DN2 PRDWL30-15DP2	15		100
						PRDWL30-25DN PRDWL30-25DP PRDWL30-25DN2 PRDWL30-25DP2		25	100

Proximity sensor

▣Cylindrical DC 3-wire type (Power : 12-24VDC)

CE

Appearance		Appearance Classification				Model	Sensing distance (mm)		Response frequency (Hz)
		Standard type		Long type					
		Shield	Non Shield	Shield	Non Shield		Shield	Non shield	
M08	Normal type					PR08-1.5DN PR08-1.5DP PR08-1.5DN2 ※ PR08-1.5DP2 ※	1.5		1500
						PR08-2DN PR08-2DP PR08-2DN2 ※ PR08-2DP2 ※		2	1000
						PRL08-1.5DN PRL08-1.5DP PRL08-1.5DN2 ※ PRL08-1.5DP2 ※	1.5		1500
						PRL08-2DN PRL08-2DP PRL08-2DN2 ※ PRL08-2DP2 ※		2	1000
	Cable outgoing connector type					PRW08-1.5DN PRW08-1.5DP PRW08-1.5DN2 ※ PRW08-1.5DP2 ※	1.5		1500
						PRW08-2DN PRW08-2DP PRW08-2DN2 ※ PRW08-2DP2 ※		2	1000
						PRWL08-1.5DN PRWL08-1.5DP PRWL08-1.5DN2 ※ PRWL08-1.5DP2 ※	1.5		1500
						PRWL08-2DN PRWL08-2DP PRWL08-2DN2 ※ PRWL08-2DP2 ※		2	1000
M12	Normal type	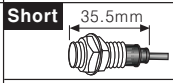				PRS12-2DN PRS12-2DP PRS12-2DN2 ※ PRS12-2DP2 ※	2		1500
			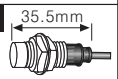			PRS12-4DN PRS12-4DP PRS12-4DN2 ※ PRS12-4DP2 ※		4	500
						PR12-2DN PR12-2DP PR12-2DN2 ※ PR12-2DP2 ※	2		1500
						PR12-4DN PR12-4DP PR12-4DN2 ※ PR12-4DP2 ※		4	500
						PRL12-4DN PRL12-4DP		4	500
	Connector type	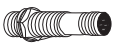				PRCM12-2DN PRCM12-2DP PRCM12-2DN2 ※ PRCM12-2DP2 ※	2		1500
			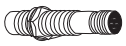			PRCM12-4DN PRCM12-4DP PRCM12-4DN2 ※ PRCM12-4DP2 ※		4	500
	Cable outgoing connector type	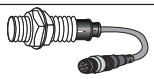				PRW12-2DN PRW12-2DP PRW12-2DN2 ※ PRW12-2DP2 ※	2		1500
			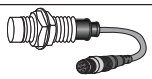			PRW12-4DN PRW12-4DP PRW12-4DN2 ※ PRW12-4DP2 ※		4	500
	Spatter resistance type					PRA12-2DN PRA12-2DP PRA12-2DN2 ※ PRA12-2DP2 ※	2		1500
M18	Normal type	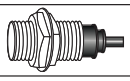				PR18-5DN PR18-5DP PR18-5DN2 ※ PR18-5DP2 ※	5		500
			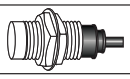			PR18-8DN PR18-8DP PR18-8DN2 ※ PR18-8DP2 ※		8	350
				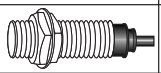		PRL18-5DN PRL18-5DP PRL18-5DN2 ※ PRL18-5DP2 ※	5		500
					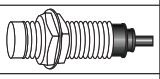	PRL18-8DN PRL18-8DP PRL18-8DN2 ※ PRL18-8DP2 ※		8	350
	Connector type					PRCM18-5DN PRCM18-5DP PRCM18-5DN2 ※ PRCM18-5DP2 ※	5		500
						PRCM18-8DN PRCM18-8DP PRCM18-8DN2 ※ PRCM18-8DP2 ※		8	350

▶"※" mark can be customized.

Proximity sensor

▣Cylindrical DC 3-wire type (Power : 12-24VDC)

CE

Appearance		Appearance Classification				Model	Sensing distance (mm)		Response frequency (Hz)
		Standard type		Long type					
		Shield	Non Shield	Shield	Non Shield		Shield	Non shield	
M18	Connector type					PRCML18-5DN PRCML18-5DP PRCML18-5DN2 ※ PRCML18-5DP2 ※	5		500
					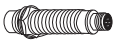	PRCML18-8DN PRCML18-8DP PRCML18-8DN2 ※ PRCML18-8DP2 ※		8	350
	Cable outgoing connector type					PRW18-5DN PRW18-5DP PRW18-5DN2 ※ PRW18-5DP2 ※	5		500
						PRW18-8DN PRW18-8DP PRW18-8DN2 ※ PRW18-8DP2 ※		8	350
						PRWL18-5DN PRWL18-5DP PRWL18-5DN2 ※ PRWL18-5DP2 ※	5		500
						PRWL18-8DN PRWL18-8DP PRWL18-8DN2 ※ PRWL18-8DP2 ※		8	350
	Spatter resistance type					PRA18-5DN PRA18-5DP PRA18-5DN2 ※ PRA18-5DP2 ※	5		500
M30	Normal type	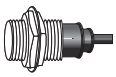				PR30-10DN PR30-10DP PR30-10DN2 ※ PR30-10DP2 ※	10		400
			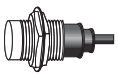			PR30-15DN PR30-15DP PR30-15DN2 ※ PR30-15DP2 ※		15	200
				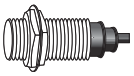		PRL30-10DN PRL30-10DP PRL30-10DN2 ※ PRL30-10DP2 ※	10		400
					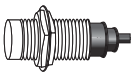	PRL30-15DN PRL30-15DP PRL30-15DN2 ※ PRL30-15DP2 ※		15	200
	Connector type					PRCM30-10DN PRCM30-10DP PRCM30-10DN2 ※ PRCM30-10DP2 ※	10		400
			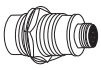			PRCM30-15DN PRCM30-15DP PRCM30-15DN2 ※ PRCM30-15DP2 ※		15	200
				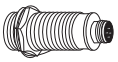		PRCML30-10DN PRCML30-10DP PRCML30-10DN2 ※ PRCML30-10DP2 ※	10		400
					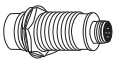	PRCML30-15DN PRCML30-15DP PRCML30-15DN2 ※ PRCML30-15DP2 ※		15	200
	Cable outgoing connector type	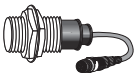				PRW30-10DN PRW30-10DP PRW30-10DN2 ※ PRW30-10DP2 ※	10		400
			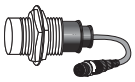			PRW30-15DN PRW30-15DP PRW30-15DN2 ※ PRW30-15DP2 ※		15	200
						PRWL30-10DN PRWL30-10DP PRWL30-10DN2 ※ PRWL30-10DP2 ※	10		400
					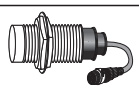	PRWL30-15DN PRWL30-15DP PRWL30-15DN2 ※ PRWL30-15DP2 ※		15	200
	Spatter resistance type	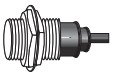				PRA30-10DN PRA30-10DP PRA30-10DN2 ※ PRA30-10DP2 ※	10		400

▶"※" mark can be customized.

Proximity sensor

▣Cylindrical AC 2-wire type (Power : 100-240VAC)

CE

Appearance		Appearance Classification				Model	Sensing distance (mm)		Response frequency (Hz)
		Standard type		Long type					
		Shield	Non shield	Shield	Non shield		Shield	Non shield	
M12	Normal type					PR12-2AO PR12-2AC	2		20
						PR12-4AO PR12-4AC		4	
	Connector type					PRCM12-2AO PRCM12-2AC	2		
						PRCM12-4AO PRCM12-4AC		4	
	Cable outgoing connector type					PRW12-2AO PRW12-2AC	2		
						PRW12-4AO PRW12-4AC		4	
	Spatter resistance type					PRA12-2AO PRA12-2AC	2		
M18	Normal type					PR18-5AO PR18-5AC	5		
						PR18-8AO PR18-8AC		8	
						PRL18-5AO PRL18-5AC	5		
						PRL18-8AO PRL18-8AC		8	
	Connector type					PRCM18-5AO PRCM18-5AC	5		
						PRCM18-8AO PRCM18-8AC		8	
						PRCML18-5AO PRCML18-5AC	5		
						PRCML18-8AO PRCML18-8AC		8	
	Cable outgoing connector type					PRW18-5AO PRW18-5AC	5		
						PRW18-8AO PRW18-8AC		8	
						PRWL18-5AO PRWL18-5AC	5		
						PRWL18-8AO PRWL18-8AC		8	
	Spatter resistance type					PRA18-5AO PRA18-5AC	5		
M30	Normal type					PR30-10AO PR30-10AC	10		
						PR30-15AO PR30-15AC		15	
						PRL30-10AO PRL30-10AC	10		
						PRL30-15AO PRL30-15AC		15	
	Connector type					PRCM30-10AO PRCM30-10AC	10		
						PRCM30-15AO PRCM30-15AC		15	
						PRCML30-10AO PRCML30-10AC	10		
						PRCML30-15AO PRCML30-15AC		15	
	Cable outgoing connector type					PRW30-10AO PRW30-10AC	10		
						PRW30-15AO PRW30-15AC		15	
						PRWL30-10AO PRWL30-10AC	10		
						PRWL30-15AO PRWL30-15AC		15	
	Spatter resistance type					PRA30-10AO PRA30-10AC	10		

Proximity sensor

▣Square DC 2-wire type(Power:12-24VDC)

Appearance Classification				Model	Sensing distance (mm)	Response frequency (Hz)
Classification		Standard type(Front sensing)	Upside sensing			
17 Square	Normal type	(Front sensing type) 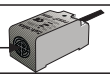		PSNT17-5DO	5	500
				PSNT17-5DC		
			(Upside sensing type) 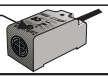	PSNT17-5DOU ※		
				PSNT17-5DCU ※		

▶"※" mark can be customized.

▣Square DC 3-wire type(Power:12-24VDC)

CE

Appearance Classification				Model	Sensing distance (mm)	Response frequency (Hz)
		Standard type(Front sensing)	Upside sensing			
12 Square	Normal type	(Front sensing type)		PS12-4DN	4	500
				PS12-4DP		
				PS12-4DN2		
			(Upside sensing type)	PS12-4DNU		
				PS12-4DPU		
				PS12-4DN2U ※		
17 Square	Normal type	(Front sensing type)		PSN17-5DN	5	700
				PSN17-5DP		
				PSN17-5DN2 ※		
				PSN17-5DP2 ※		
				PSN17-5DN-F		
				PSN17-8DN	8	200
				PSN17-8DP		
				PSN17-8DN2		
				PSN17-8DN-F		
				PSN17-8DP-F		
				PSN17-8DN2-F		
			(Upside sensing type)	PSN 17-5DNU ※	5	700
				PSN17-5DPU ※		
				PSN17-5DN2U ※		
				PSN17-8DNU ※	8	200
				PSN17-8DPU ※		
				PSN17-8DN2U ※		
				PSN17-8DNU-F		
				PSN17-8DPU-F		
				PSN17-8DN2U-F		
25 Square	Normal type			PSN25-5DN	5	300
				PSN25-5DP		
				PSN25-5DN2 ※		
				PSN25-5DP2 ※		
	Flat type			PFI25-8DN	8	200
				PFI25-8DP		
				PFI25-8DN2 ※		
				PFI25-8DP2 ※		
30 Square	Normal type			PSN30-10DN	10	250
				PSN30-10DP		
				PSN30-10DN2 ※		
				PSN30-10DP2 ※		
				PSN30-15DN	15	200
				PSN30-15DP		
				PSN30-15DN2 ※		
				PSN30-15DP2 ※		
40 Square	Normal type			PSN40-20DN	20	100
				PSN40-20DP		
				PSN40-20DN2 ※		
				PSN40-20DP2 ※		
50 Square	Normal type		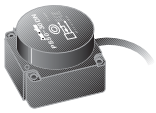	PS50-30DN	30	50
				PS50-30DP		
				PS50-30DN2 ※		
				PS50-30DP2 ※		

▶"※" mark can be customized.

Proximity sensor

▣Rectangular DC 4-wire type(Power:12-48VDC)

Appearance Classification				Model	Sensing distance (mm)	Response frequency (Hz)
Classification		Standard type(Front sensing)	Upside sensing			
80 Square	Normal type		Long distance sensing type	AS80-50DN3	50	100
				AS80-50DP3		

▣Rectangular AC 2-wire type(Power:100-240VAC)

Appearance Classification				Model	Sensing distance (mm)	Response frequency (Hz)
Classification		Standard type(Front sensing)	Upside sensing			
25 Square	Normal type			PSN25-5AO	5	20
				PSN25-5AC		
	Flat type		Flat Type 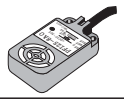	PFI25-8AO	8	
				PFI25-8AC		
30 Square	Normal type			PSN30-10AO	10	
				PSN30-10AC		
				PSN30-15AO	15	
				PSN30-15AC		
40 Square	Normal type			PSN40-20AO	20	
				PSN40-20AC		

▣Capacitive cylindrical DC 3-wire type(Power:12-24VDC)

Classification		Appearance Classification				Model	Sensing distance (mm)		Response frequency (Hz)
		Standard type		Long type					
		Shield	Non shield	Shield	Non shield		Shield	Non shield	
M18	Normal type	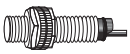				CR18-8DN	8		50
						CR18-8DP			
						CR18-8DN2 ※			
M30	Normal type		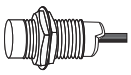			CR30-15DN		15	
						CR30-15DP			
						CR30-15DN2 ※			

▶"※" mark can be customized.

▣Capacitive cylindrical AC 2-wire type(Power:100-240VAC)

Classification		Appearance Classification				Model	Sensing distance (mm)		Response frequency (Hz)
		Standard type		Long type					
		Shield	Non shield	Shield	Non shield		Shield	Non shield	
M18	Normal type	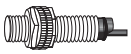				CR18-8AO	8		20
						CR18-8AC			
M30	Normal type		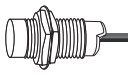			CR30-15AO		15	
						CR30-15AC			

▣Transmission coupler

Classification		Appearance Classification				Model	Sensing distance (mm)		Response frequency (Hz)
		Standard type		Long type					
		Shield	Non shield	Shield	Non shield		Shield	Non shield	
M18	Normal	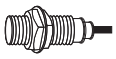				PET18-5	5		

※Transmittable Proximity sensor: PRT18-5D□, PRCMT18-5D□, PR18-5D□, PRCM18-5D□, PRL18-5D□, PRCML18-5D□

Proximity sensor

▣Dimensions of cable outgoing type

Unit:mm

●M08

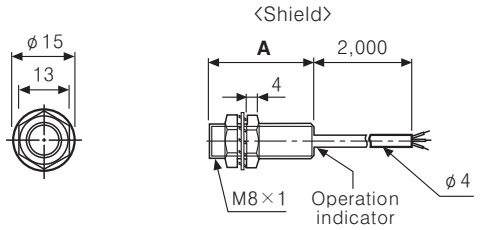

Model	A
PRT08-1.5D□	30
PR08-1.5D□	30
PRL08-1.5D□	40

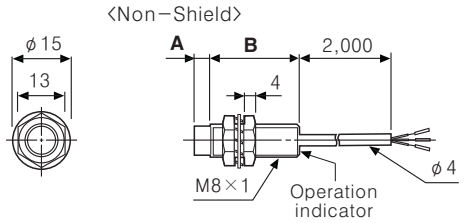

Model	A	B
PRT08-2D□	4	26
PR08-2D□	4	26
PRL08-2D□	4	36

●M12

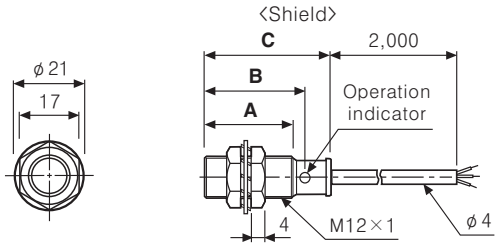

Model	A	B	C
PRS12-2D□	24.5	28.5	35.5
PRT12-2D□	31.5	35.5	42.5
PR12-2D□	31.5	35.5	42.5
PR12-2A□	48.5	52.5	59.5

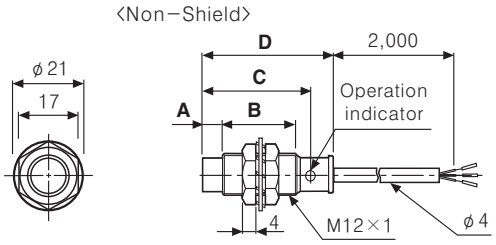

Model	A	B	C	D
PRS12-4D□	7	17.5	28.5	35.5
PRT12-4D□	7	24.5	35.5	42.5
PRL12-4D□	7	37.0	48.0	55.0
PR12-4D□	7	24.5	35.5	42.5
PRS12-8D□	7	24.5	35.5	42.5
PR12-4A□	7	41.5	52.5	59.5

●M12

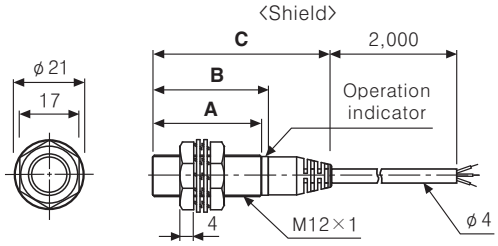

Model	A	B	C
PRDT12-4D□	31.5	33.5	51.8
PRD12-4D□	31.5	33.5	51.8
PRDLT12-4D□	44.0	46.0	64.3
PRDL12-4D□	44.0	46.0	64.3

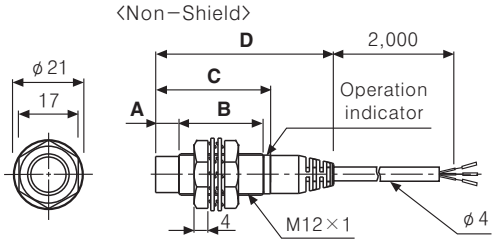

Model	A	B	C	D
PRDT12-8D□	7	24.5	23.5	51.8
PRD12-8D□	7	24.5	35.5	51.8
PRDLT12-8D□	7	37.0	46.0	64.3
PRDL12-8D□	7	37.0	46.0	64.3

●M18

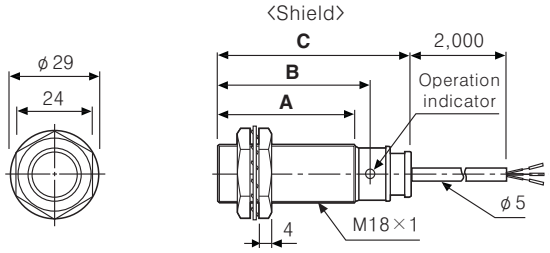

Model	A	B	C
PRT18-5D□	29.0	33.5	47.0
PR18-5D□	29.0	33.5	47.0
PR18-5A□	35.3	39.8	53.3
PRL18-5D□	62.0	66.5	80.0
PRL18-5A□	62.0	66.5	80.0

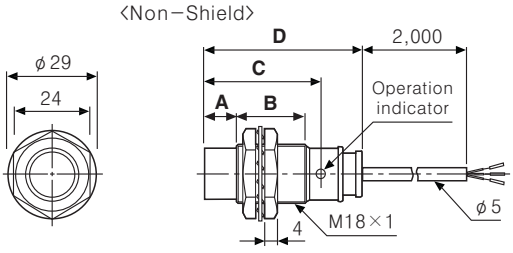

Model	A	B	C	D
PRT18-8D□	10	19.0	33.5	47.0
PR18-8D□	10	19.0	33.5	47.0
PR18-8A□	10	25.3	39.8	53.3
PRL18-8D□	10	52.0	66.5	80.0
PRL18-8A□	10	52.0	66.5	80.0

Proximity sensor

▣Dimensions of cable outgoing type

Unit:mm

●M18

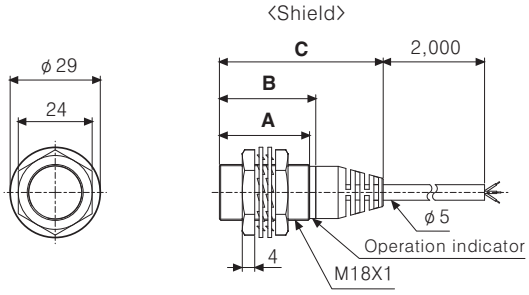

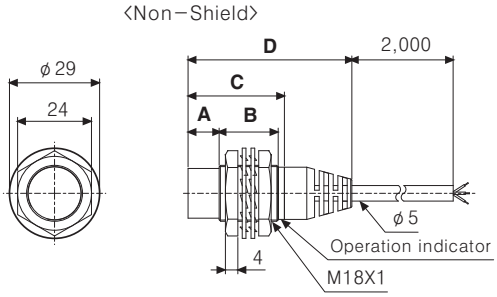

Model	A	B	C
PRDT18-7D□	29.5	31.5	53.2
PRD18-7D□	29.5	31.5	53.2
PRDLT18-7D□	62.0	64.0	85.7
PRDL18-7D□	62.0	64.0	85.7

Model	A	B	C	D
PRDT18-14D□	10	19.0	31.0	52.7
PRD18-14D□	10	19.0	31.0	52.7
PRDLT18-14D□	10	52.0	64.0	85.7
PRDL18-14D□	10	52.0	64.0	85.7

●M30

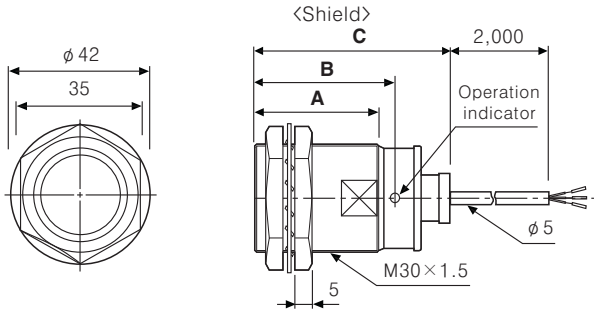

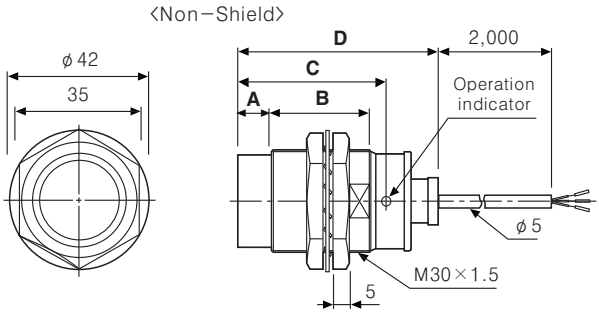

Model	A	B	C
PRT30-10D□	38.0	43.0	58.0
PR30-10D□	38.0	43.0	58.0
PR30-10A□	38.0	43.0	58.0
PRL30-10D□	60.0	65.0	80.0
PRL30-10A□	60.0	65.0	80.0

Model	A	B	C	D
PRT30-15D□	10	28.0	43.0	58.0
PR30-15D□	10	28.0	43.0	58.0
PR30-15A□	10	28.0	43.0	58.0
PRL30-15D□	10	50.0	65.0	80.0
PRL30-15A□	10	50.0	65.0	80.0

●M30

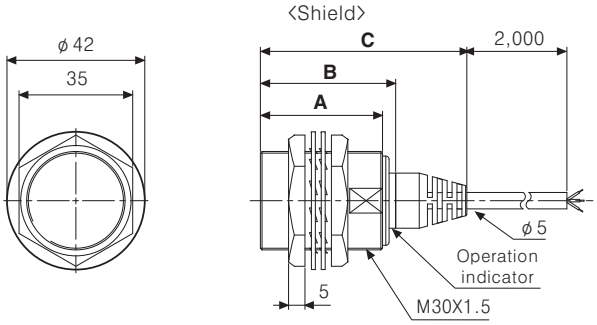

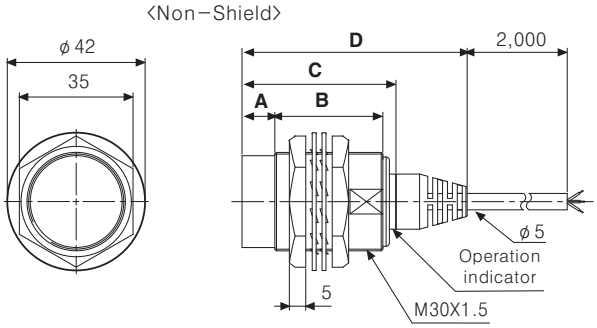

Model	A	B	C
PRDT30-15D□	38.0	40.3	62.0
PRD30-15D□	38.0	40.3	62.0
PRDLT30-15D□	60.0	62.3	84.0
PRDL30-15D□	60.0	62.3	84.0

Model	A	B	C	D
PRDT30-25D□	10	28.0	40.3	62.0
PRD30-25D□	10	28.0	40.3	62.0
PRDLT30-25D□	10	50.0	62.3	84.0
PRDL30-25D□	10	50.0	62.3	84.0

▣Dimensions of spatter resistance type

Unit:mm

●PRA12-2D□ ●PRAT12-2D□ ●PRAWT12-2D□

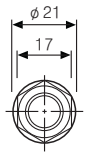

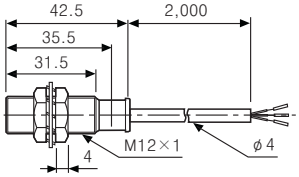

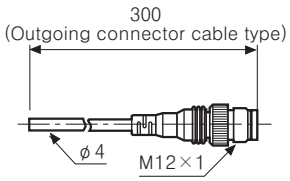

●PRA12-2A□

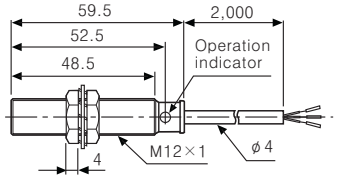

Proximity sensor

▣Dimensions of spatter resistance type

Unit:mm

●PRA18-5D□ ●PRAT18-5D□ ●PRAWT18-5D□

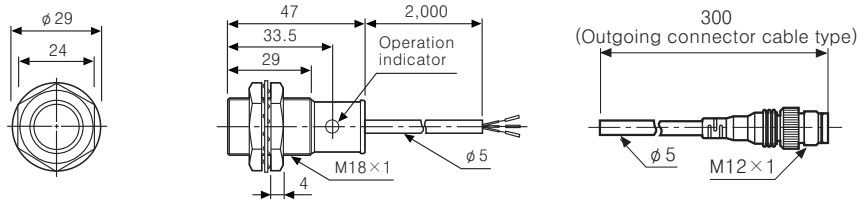

●PRA18-5A□

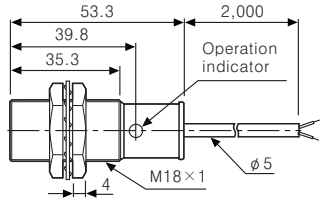

●PRA30-10D□ ●PRAT30-10D□ ●PRAWT30-10D□

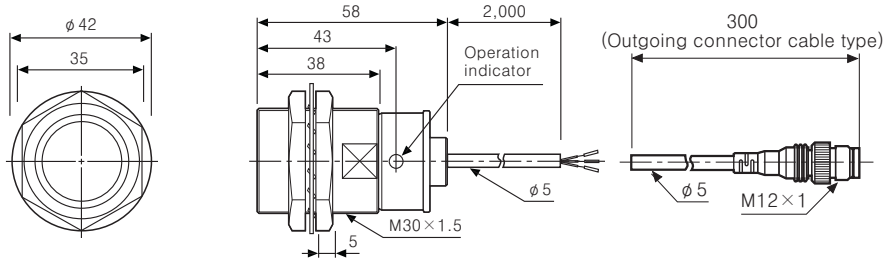

●PRA30-10A□

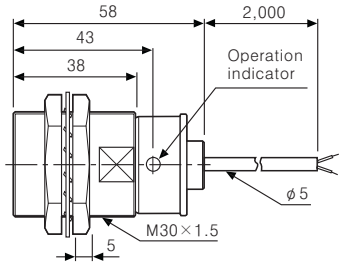

●PRDAT18-7D□

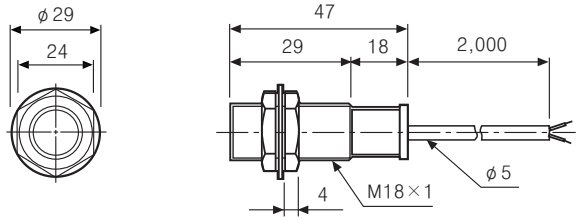

●PRDAWT18-7D□

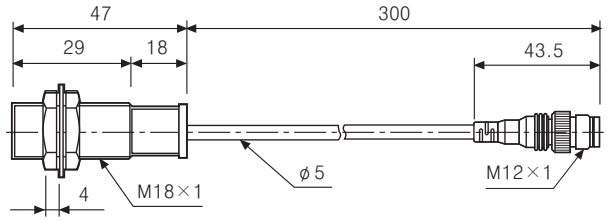

●PRDAT30-15D□

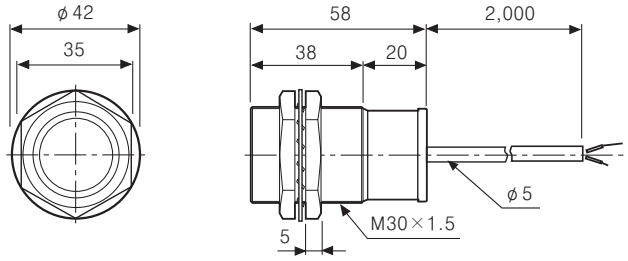

●PRDAWT30-15D□

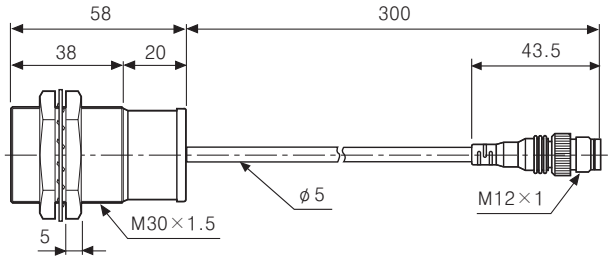

▣Dimensions of connector type

●M12

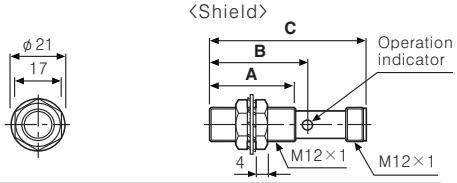

Model	A	B	C
PRCMT12-2D□	31.5	35.5	55.8
PRCM12-2D□	31.5	35.5	55.8
PRCM12-2A□	48.5	52.5	72.8

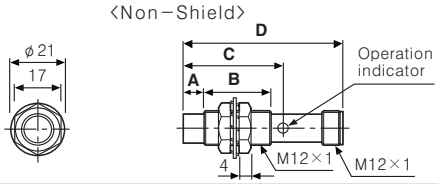

Model	A	B	C	D
PRCMT12-4D□	7	24.5	35.5	55.8
PRCM12-4D□	7	24.5	35.5	55.8
PRCM12-4A□	7	41.5	52.5	72.8

●M12

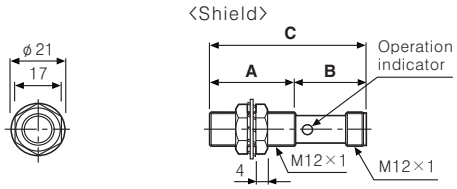

Model	A	B	C
PRDCMT12-4D□	31.5	24.3	55.8
PRDCM12-4D□	31.5	24.3	55.8
PRDCMLT12-4D□	44.0	24.3	68.3
PRDCML12-4D□	44.0	24.3	68.3

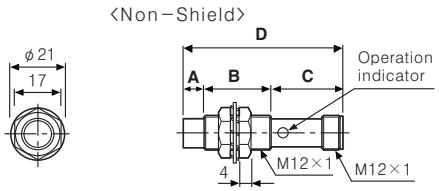

Model	A	B	C	D
PRDCMT12-8D□	7	24.5	24.3	55.8
PRDCM12-8D□	7	24.5	24.3	55.8
PRDCMLT12-8D□	7	37.0	24.3	68.3
PRDCML12-8D□	7	37.0	24.3	68.3

Proximity sensor

▣Dimensions of connector type

Unit:mm

●M18

〈Shield〉

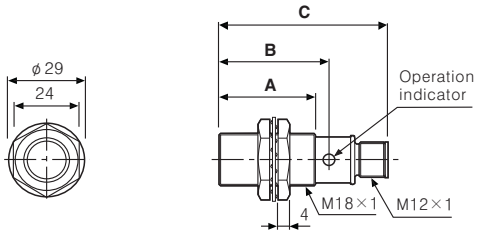

Model	A	B	C
PRCMT18-5D□	29.0	33.5	53.8
PRCM18-5D□	29.0	33.5	53.8
PRCM18-5A□	35.3	39.5	60.1
PRCML18-5D□	62.0	66.5	86.8
PRCML18-5A□	62.0	66.5	86.8

〈Non-Shield〉

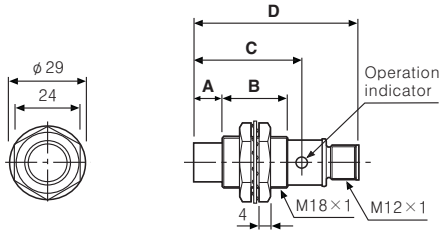

Model	A	B	C	D
PRCMT18-8D□	10	19.0	33.5	53.8
PRCM18-8D□	10	19.0	33.5	53.8
PRCM18-8A□	10	25.3	39.5	60.1
PRCML18-8D□	10	52.0	66.5	86.8
PRCML18-8A□	10	52.0	66.5	86.8

●M18

〈Shield〉

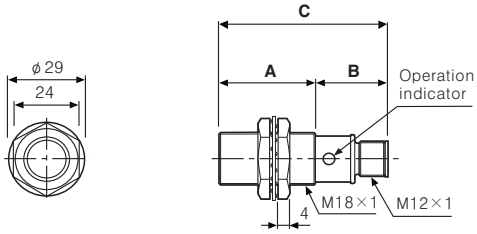

Model	A	B	C
PRDCMT18-7D□	29.5	24.8	54.3
PRDCM18-7D□	29.5	24.8	54.3
PRDCMLT18-7D□	62.5	24.8	87.3
PRDCML18-7D□	62.5	24.8	87.3

〈Non-Shield〉

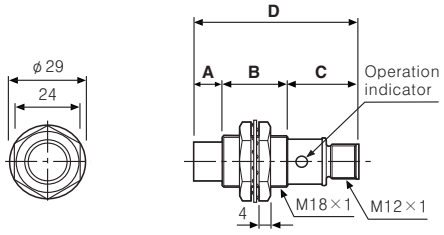

Model	A	B	C	D
PRDCMT18-14D□	10	19.0	24.8	53.8
PRDCM18-14D□	10	19.0	24.8	53.8
PRDCMLT18-14D□	10	52.0	24.8	86.8
PRDCML18-14D□	10	52.0	24.8	86.8

●M30

〈Shield〉

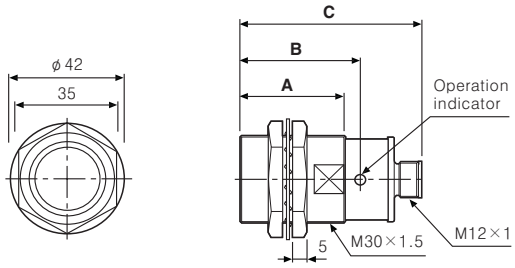

Model	A	B	C
PRCMT30-10D□	38.0	43.0	63.8
PRCM30-10D□	38.0	43.0	63.8
PRCM30-10A□	38.0	43.0	63.8
PRCML30-10D□	60.0	65.0	85.8
PRCML30-10A□	60.0	65.0	85.8

〈Non-Shield〉

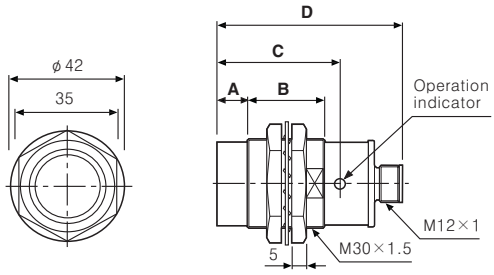

Model	A	B	C	D
PRCMT30-15D□	10	28.0	43.0	63.8
PRCM30-15D□	10	28.0	43.0	63.8
PRCM30-15A□	10	28.0	43.0	63.8
PRCML30-15D□	10	50.0	65.0	85.8
PRCML30-15A□	10	50.0	65.0	85.8

●M30

〈Shield〉

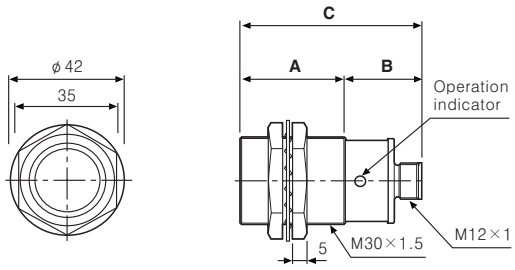

Model	A	B	C
PRDCMT30-15D□	38.0	25.8	63.8
PRDCM30-15D□	38.0	25.8	63.8
PRDCMLT30-15D□	60.0	25.8	85.8
PRDCML30-15D□	60.0	25.8	85.8

〈Non-Shield〉

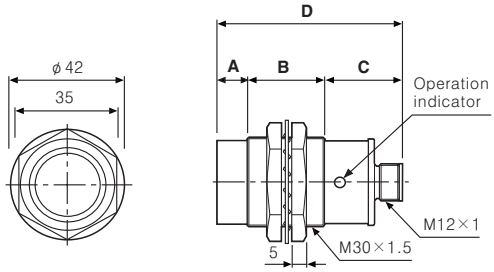

Model	A	B	C	D
PRDCMT30-25D□	10	28.0	25.8	63.8
PRDCM30-25D□	10	28.0	25.8	63.8
PRDCMLT30-25D□	10	50.0	25.8	85.8
PRDCML30-25D□	10	50.0	25.8	85.8

Proximity sensor

▣Dimensions of cable outgoing connector type

Unit:mm

●M08

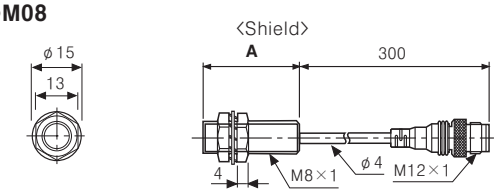

Model	A
PRWT08-1.5D□	30
PRW08-1.5D□	30
PRWL08-1.5D□	40

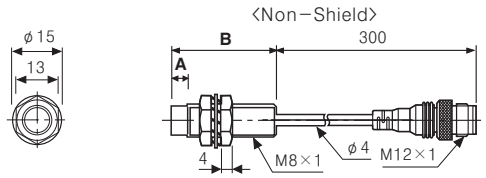

Model	A	B
PRWT08-2D□	4	30
PRW08-2D□	4	30
PRWL08-2D□	4	30

●M12

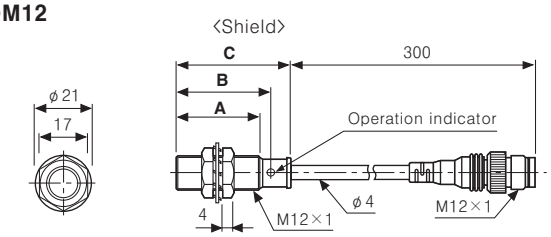

Model	A	B	C
PRWT12-2D□	31.5	35.5	42.5
PRW12-2D□	31.5	35.5	42.5
PRW12-2A□	48.5	52.5	59.5

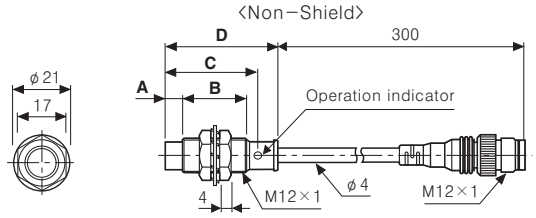

Model	A	B	C	D
PRWT12-4D□	7	24.5	35.5	42.5
PRW12-4D□	7	24.5	35.5	42.5
PRW12-4A□	7	41.5	52.5	59.5

●M12

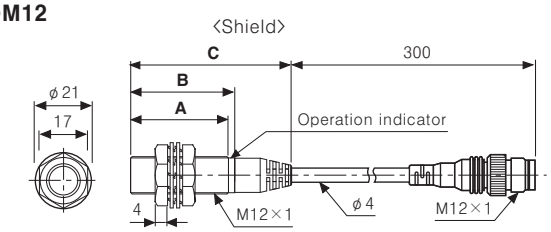

Model	A	B	C
PRDWT12-4D□	31.5	33.5	51.8
PRDW12-4D□	31.5	33.5	51.8
PRDWL12-4D□	44.0	46.0	64.3

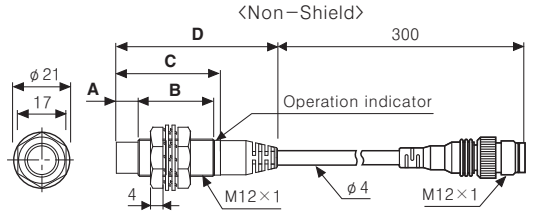

Model	A	B	C	D
PRDWT12-7D□	7	24.5	33.5	51.8
PRDW12-7D□	7	24.5	33.5	51.8
PRDWL12-7D□	7	37.0	46.0	64.3

●M18

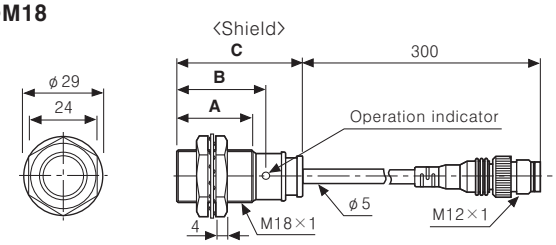

Model	A	B	C
PRWT18-5D□	29.0	33.5	47.0
PRW18-5D□	29.0	33.5	47.0
PRW18-5A□	35.3	39.8	53.5
PRWL18-5D□	62.0	66.5	80.0
PRWL18-5A□	62.0	66.5	80.0

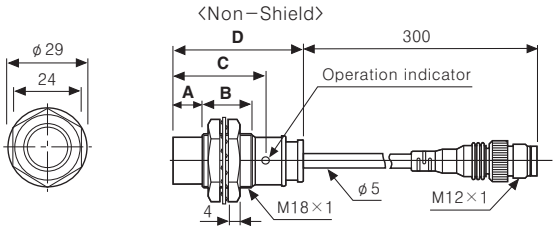

Model	A	B	C	D
PRWT18-8D□	10	19.0	33.5	47.0
PRW18-8D□	10	19.0	33.5	47.0
PRW18-8A□	10	25.3	39.8	53.5
PRWL18-8D□	10	52.0	66.5	80.0
PRWL18-8A□	10	52.0	66.5	80.0

●M18

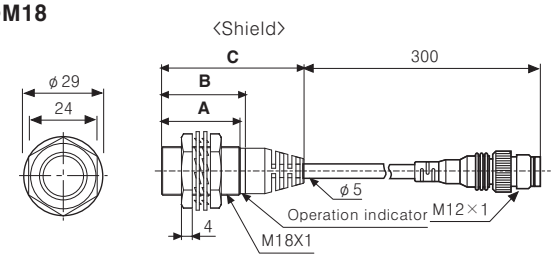

Model	A	B	C
PRDWT18-7D□	38.5	40.5	62.2
PRDW18-7D□	38.5	40.5	62.2
PRDWLT18-7D□	62.0	64.0	85.7
PRDWL18-7D□	62.0	64.0	85.7

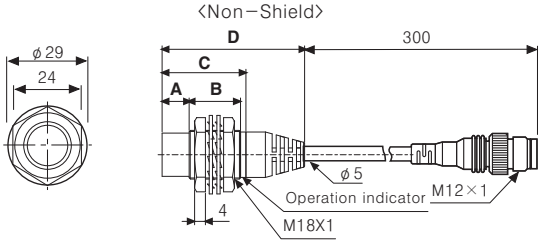

Model	A	B	C	D
PRDWT18-14D□	10	29.0	41.0	62.7
PRDW18-14D□	10	29.0	41.0	62.7
PRDWLT18-14D□	10	52.0	64.0	85.7
PRDWL18-14D□	10	52.0	64.0	85.7

Proximity sensor

▣Dimensions of cable outgoing connector type

Unit:mm

●M30

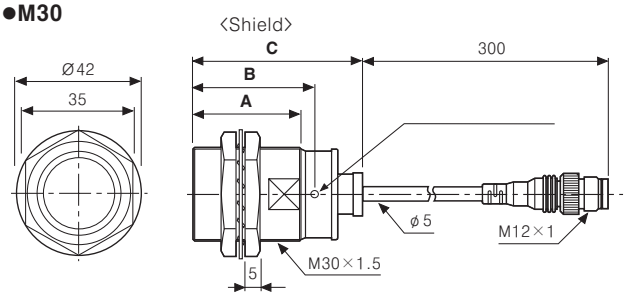

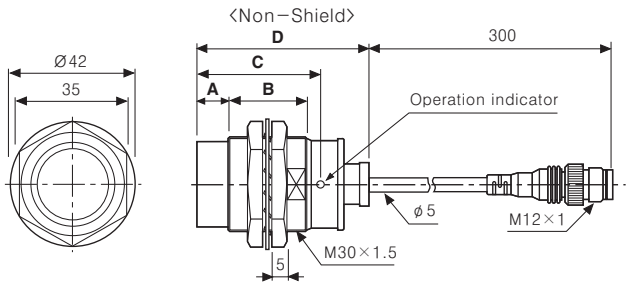

Model	A	B	C
PRWT30-10D□	38.0	43.0	58.0
PRW30-10D□	38.0	43.0	58.0
PRW30-10A□	38.0	43.0	58.0
PRWL30-10D□	60.0	65.0	80.0
PRWL30-10A□	60.0	65.0	80.0

Model	A	B	C	D
PRWT30-15D□	10	28.0	43.0	58.0
PRW30-15D□	10	28.0	43.0	58.0
PRW30-15A□	10	28.0	43.0	58.0
PRWL30-15D□	10	50.0	65.0	80.0
PRWL30-15A□	10	50.0	65.0	80.0

●M30

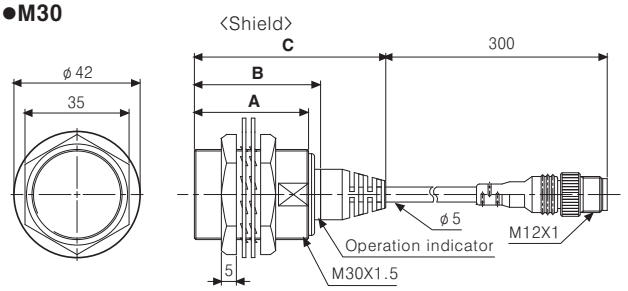

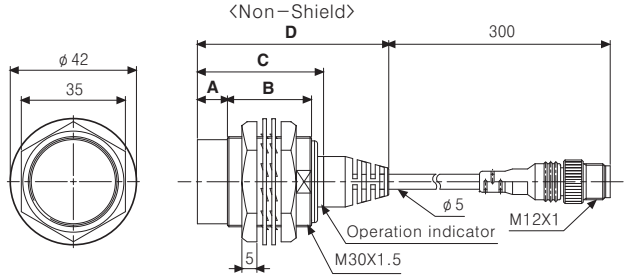

Model	A	B	C
PRDWT30-10D□	38.0	40.3	62.0
PRDW30-10D□	38.0	40.3	62.0
PRDWLT30-10D□	60.0	62.3	84.0
PRDWL30-10D□	60.0	62.3	84.0

Model	A	B	C	D
PRWT30-15D□	10	28.0	40.3	62.0
PRW30-15D□	10	28.0	40.3	62.0
PRWLT30-15D□	10	50.0	62.3	84.0
PRWL30-15D□	10	50.0	62.3	84.0

▣Dimensions of square type

Unit:mm

●PS12-4D□

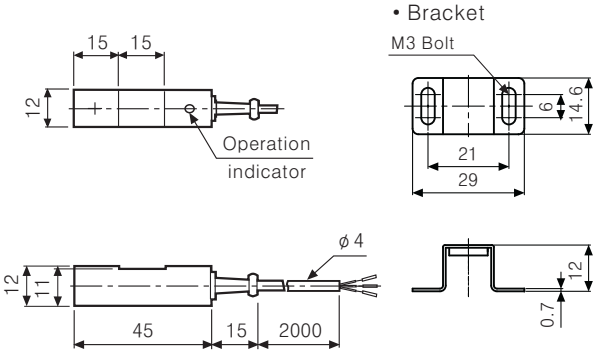

●PSN25-5D□ ●PSN25-5A□

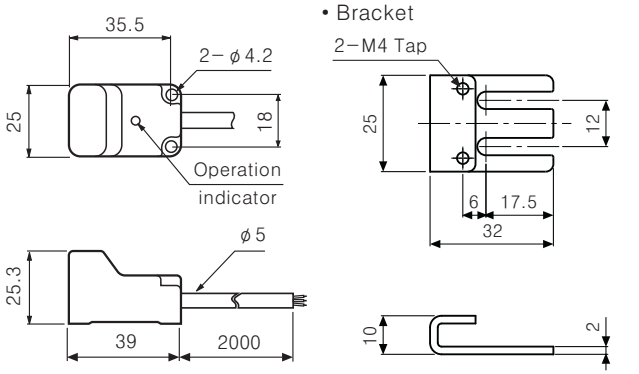

●PSN17-5(8)D□ ●PSNT17-5D□

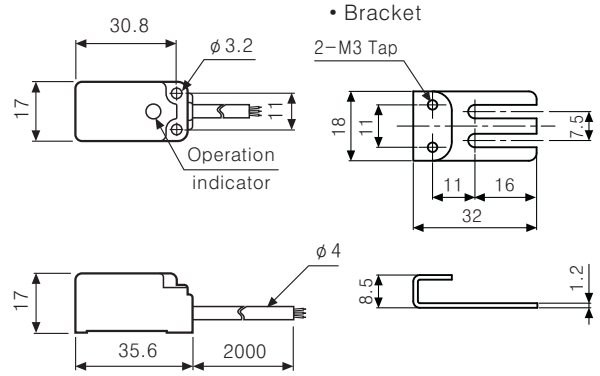

●PSN30-10(15)D□ ●PSN30-10(15)A□

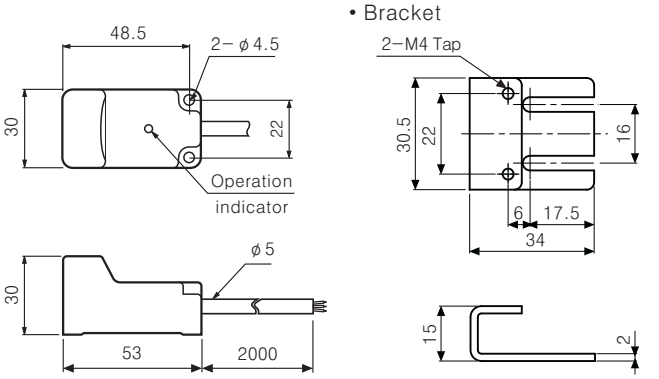

Proximity sensor

▣Dimensions of square type

Unit:mm

●PS50-30D□

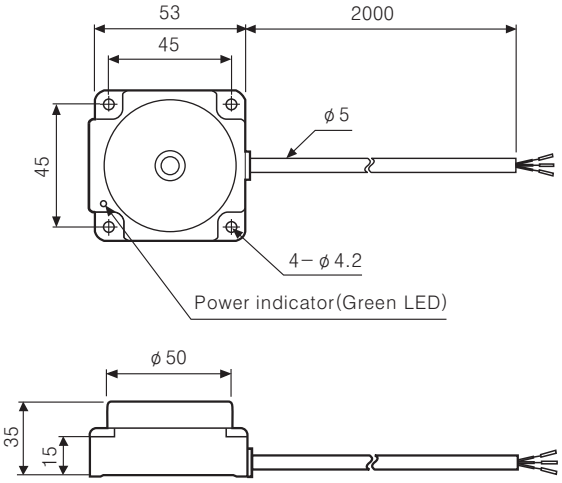

●PS40-20D□ ●PSN40-20A□

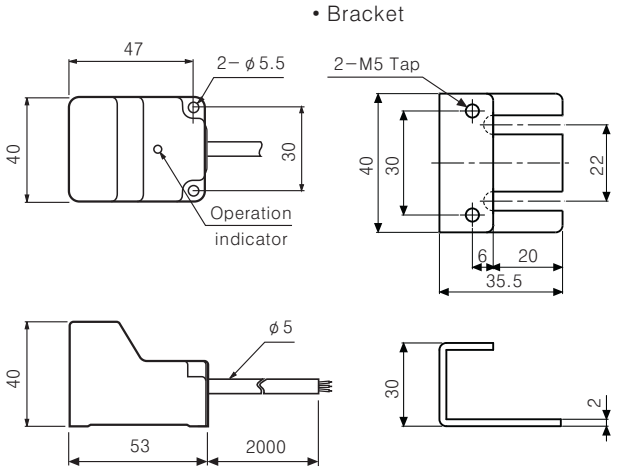

●PFI25-8D□ ●PFI25-8A□

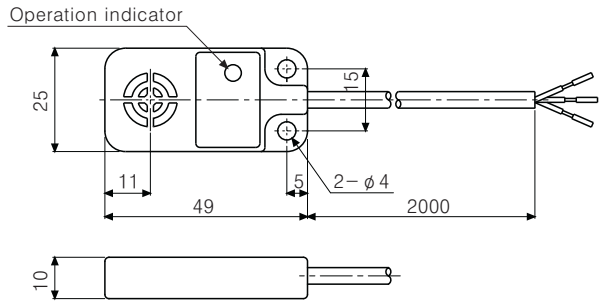

●AS80-50D□

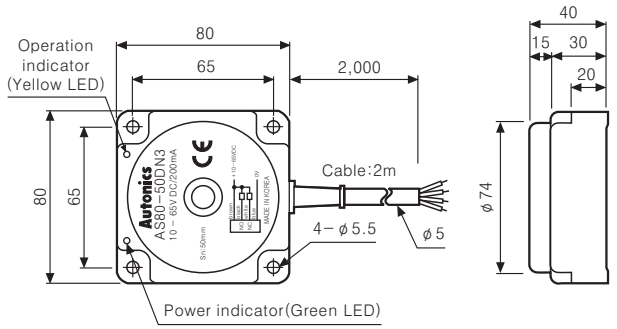

▣Dimensions of capacitive type

Unit:mm

●CR18-8D□ ●CR18-8A□

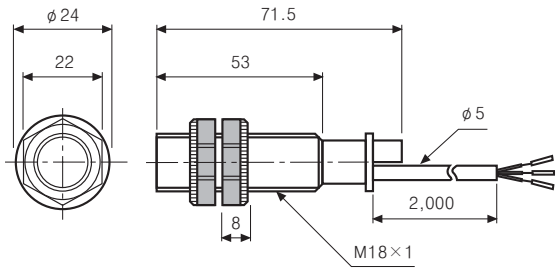

●CR30-15D□ ●CR30-15A□

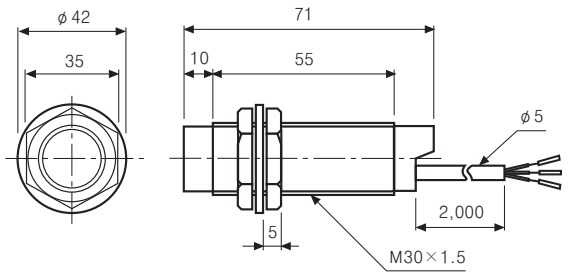

Junction box/Accessory

Type	Junction box						Accessory(Sold separately)	
	DC 2-wire type	DC 3-wire type	DC 2-wire type	DC 3-wire type	DC 2-wire type	DC 3-wire type	Waterproof cover	Pretection cover
Model	PT4-2D	PT4-3DN PT4-3DP	PT6-2D	PT6-3DN PT6-3DP	PT8-2D	PT8-3DN PT8-3DP	P96-M12-1	—
Appearances & Dimensions	[W50×H27.5×L73mm]		[W50×H27.5×L98mm]		[W50×H27.5×L123mm]			
Numbers of outlet	4		6		8		Applicable model	●PT4-□□□ ●PT6-□□□ ●PT8-□□□
Power supply	12-24VDC							
Protection	IP66(IEC standard) ※IP67 : In case of using waterproof cover							

▣Dimensions

◎Junction Box

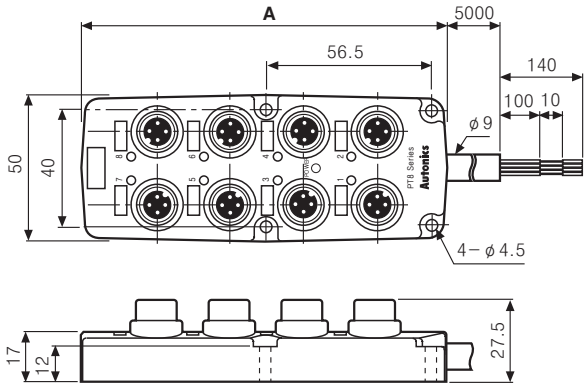

Model	A
PT4-□□	73
PT6-□□	98
PT8-□□	123

Unit:mm

▣Panel mounting connector

◎Connector for panel mounting(Non-flush)

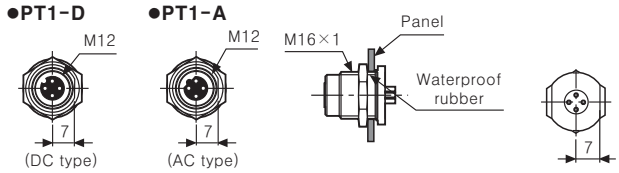

◎Connector for panel mounting(Flush)

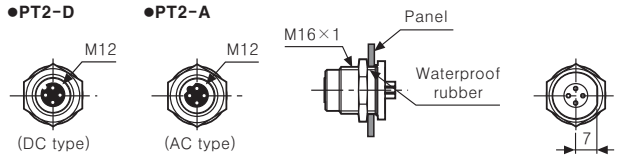

◎Panel cut-out

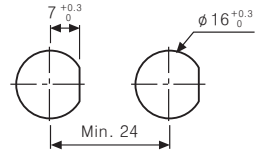

◎Printed circuit board(PCB) cot-out

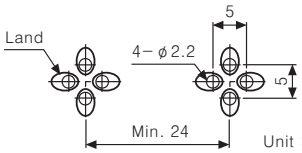

Unit : mm

Connector cable

◎Connector wire type

Appearances	Model		Wire	Cable length (L)	Wire coat	
	DC type	AC type			Material	Cable outer ϕ
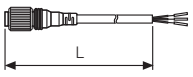	CID2-2(P) CID2-2-I ※	CIA2-2(P)	2	2	PVC	ϕ5
	CID3-2(P)	—	3			
	CID408-2	—	4			
	CIDH4-3(P)	—	4	3		
	CID2-5(P) CID2-5-I ※	CIA2-5(P)	2	5		
	CID3-5	—	3			
	CIDH4-5(P)	—	4			
	CID408-5	—	4			
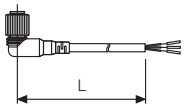	CLD2-2(P) CLD2-2-I ※	CLA2-2(P)	2	2		
	CLD3-2(P)	—	3			
	CLD408-2	—	4			
	CLDH4-3(P)	—	4	3		
	CLD2-5(P) CLD2-5-I ※	CLA2-5(P)	2	5		
	CLD3-5	—	3			
	CLDH4-5(P)	—	4			
	CLD408-5	—	4			

◎Connector connection type

Appearances	Model		Cable length (L)	Wire coat	
	DC type	AC type		Material	Cable outer ϕ
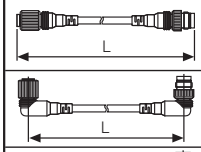	C1D4-2(P)	C1A4-2(P)	2	PVC	ϕ5
	C1D4-5(P)	C1A4-5(P)	5		
	C2D4-2	C2A4-2	2		
	C2D4-5	C2A4-5	5		
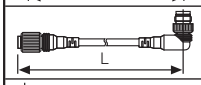	C3D4-2	C3A4-2	2		
	C3D4-5	C3A4-5	5		
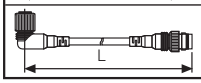	C4D4-2	C4A4-2	2		
	C4D4-5	C4A4-5	5		

▶ (P) is plug type.
▶"※" mark indicates IEC standard connection and it can be customized.

Digital pressure sensor(PSAN Series)

▣Ordering information

PS AN – V 01 C P V – Rc1/8

Pressure port (※1)	R1/8	Standard(Fluid type)
	Rc1/8	Standard(Pneumatic type)
	NPT1/8	Option
	7/16−20UNF	Option(Fluid type)
Option output(Function)	V	Analog voltage(1−5V) output
	A	Analog current(4−20mA) output
	H	Hold/Auto shift input
Output type	No mark	NPN open collector output
	P	PNP open collector output
Cable	C	Connector type
Pressure range	01	100kPa
	1	1MPa
Pressure type	No mark	Positive pressure type
	V	Vacuum pressure type
	C	Compound pressure type
Applicable fluid	No mark	Pneumatic type(Gas)
	L	Fluid type(Gas, Liquid, Oil)
Appearance	AN	Regular square New type(30mm×30mm)
Item	PS	Pressure sensor

(※1) In case of using M5 port, use PSO−Z01 (M5 Gender) together.

▣Specifications

Pressure type		Gauge pressure			
		Vacuum pressure type	Positive pressure type		Compound pressure type
Model (※1)	Analog voltage output	**PSAN-(L)V01C(P)V**	**PSAN-(L)01C(P)V**	**PSAN-(L)1C(P)V**	**PSAN-(L)C01C(P)V**
	Analog current output	**PSAN-(L)V01C(P)A**	**PSAN-(L)01C(P)A**	**PSAN-(L)1C(P)A**	**PSAN-(L)C01C(P)A**
	Hold/Auto shift input	**PSAN-(L)V01C(P)H**	**PSAN-(L)01C(P)H**	**PSAN-(L)1C(P)H**	**PSAN-(L)C01C(P)H**
Appearances & Dimensions		CE [W30×H30×L30.7mm] **Pneumatic type**		**Fluid type**	
Rated pressure range		0.0 to −101.3kPa	0.0 to 100.0kPa	0 to 1,000kPa	−101.3kPa to 100.0kPa
Display pressure range		5.0 to −101.3kPa	−5.0 to 110.0kPa	−50 to 1,100kPa	−101.3kPa to 110.0kPa
Min.display unit(internal resolution)		0.1kPa(1/2,000)	0.1kPa(1/2,000)	1kPa(1/2,000)	0.1kPa(1/2,000)
Max. pressure range		2 times of rated pressure		1.5 times of rated pressure	2 times of rated pressure
Applicable fluid		• **Pneumatic type** ☞ Air, Non−corrosive gas • **Fluid type** ☞ Air, Non−corrosive gas and fluid that will not corrode SUS316L			
Power supply		12V−24VDC ±10%(Ripple P−P:Max. 10%)			
Current consumption		Max. 50mA(Analog current output type Max 75mA)			
Control output		• NPN open collector output ☞ Max. sink current:Max. 100mA, Applied voltage:Max. 30VDC, Residual voltage:Max. 1V • PNP open collector output ☞ Max. source current:Max. 100mA, Residual voltage:Max. 2V			
	Hysteresis(※2)	Min. display range			
	Repeat error	±0.2%F.S. ± Min. display range			
	Response time	Selectable 2.5ms, 5ms, 100ms, 500ms, 1000ms			
	Short circuit protection	Built−in			
Analog output (※3)	Voltage output	• Output voltage: 1−5VDC ±2% F.S. • Linear: Within ±1% F.S. • Output impedance: 1kΩ • Zero point: Within 1VDC ±2% F.S. • Span: Within4VDC ±2% F.S. • Resolution: 1/2,000(equal to display resolution) • Response Time: 50ms			
	Current output	• Output current:4−20mA ±2% F.S. • Linear:Within ±1% F.S. • Zero−point:Within 4mA ±2% F.S. • Span:Within16mA ±2% F.S. • Resolution:1/2,000(equal to display resolution) • Response Time:70ms			
Display method		4digit LED 7segment			

※F.S. : Rated pressure.
(※2) In hysteresis output mode, detection difference is variable.
(※1) (P) is PNP output type, □ of model name is as pressure port.
(※3) It is allowed to select one analog output type only.

▣Rated pressure and Max. pressure display range

Type	kPa	kgf/㎠	bar	psi	mmHg	inHg	mmH2O
Vacuum pressure	**0.0 to −101.3** (5.0 to −101.3)	**0.000 to −1.034** (0.051 to −1.034)	**0.000 to −1.013** (0.050 to −1.013)	**0.00 to −14.70** (0.74 to −14.70)	**0 to −760** (38.0 to −760.0)	**0.0 to −29.9** (1.50 to −29.90)	**0.0 to −103.4** (5.1 to −103.4)
Positive pressure	**0.0 to 100.0** (−5.0 to 110.0)	**0.000 to 1.020** (−0.051 to 1.122)	**0.000 to 1.000** (−0.050 to 1.100)	**0.00 to 14.50** (−0.72 to 15.96)	——	——	——
	0 to 1000 (−50 to 1100)	**0.00 to 10.20** (−0.51 to 11.22)	**0.00 to 10.00** (−0.50 to 11.00)	**0.0 to 145.0** (−7.2 to 159.6)	——	——	——
Compound pressure	**−101.3 to 100.0** (−101.3 to 110.0)	**−1.034 to 1.020** (−1.034 to 1.122)	**−1.013 to 1.000** (−1.013 to 1.100)	**−14.70 to 14.50** (−14.70 to 15.96)	**−760 to 750** (−760.0 to 824.0)	**−29.9 to 29.5** (−29.88 to 32.58)	**−103.4 to 102.0** (−103.4 to 112.2)

※( ) is Max. pressure display range.
※When using a unit mmH2O, please multiply display value by 100.

Digital pressure sensor(PSAN Series)

▣Dimensions

Unit:mm

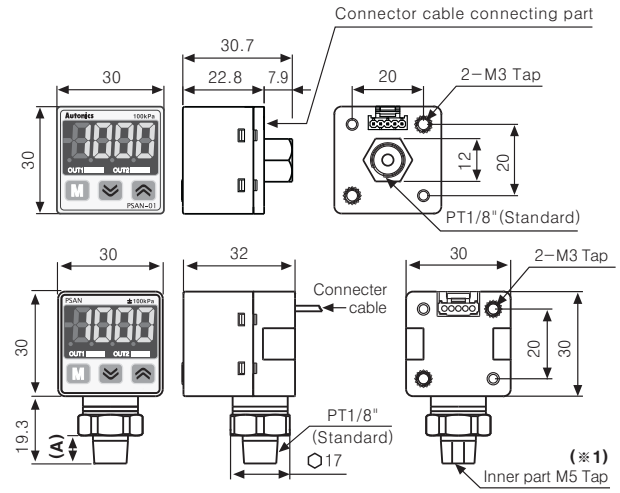

※**(A)** PT1/8" model(Standard): 8, NPT1/8" model: 8, 7/16"-20 UNF model: 11
(※1) Only for PT1/8" model, NPT1/8" model

●Panel mounting bracket

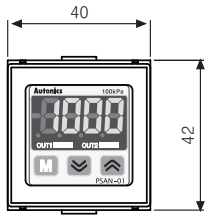

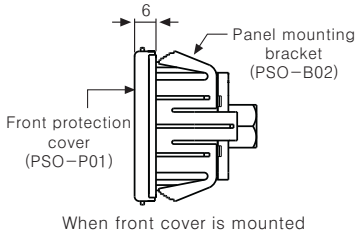

●Panel cut-out

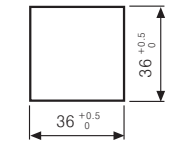

(Panel thickness: 0.8mm to 3.5mm)

●Sold separately

• Panel mounting bracke • Front protection cover • M5 Gender

〈 PSO-B02 〉

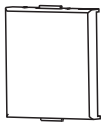

〈 PSO-P01 〉

〈 PSO-Z01 〉

●Fixing bracket for mounting

〈 Bracket A 〉

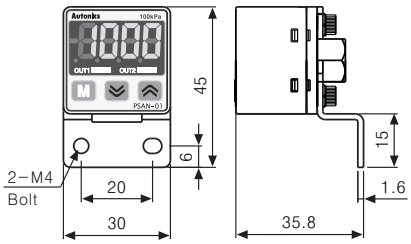

〈 Bracket B 〉

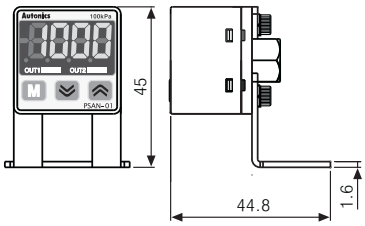

●Bracket-B

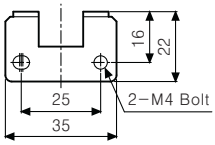

●Bracket-A

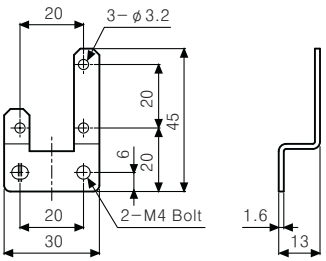

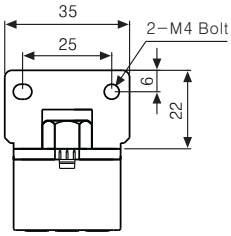

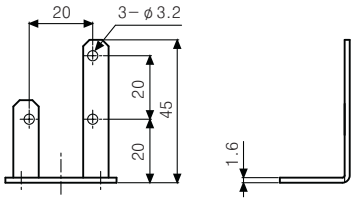

▣Input/Output circuit and diagram

◎Analog output (Voltage output PSAN-□□□□V-□, Current output PSAN-□□□□A-□ type)

●NPN open collector output type

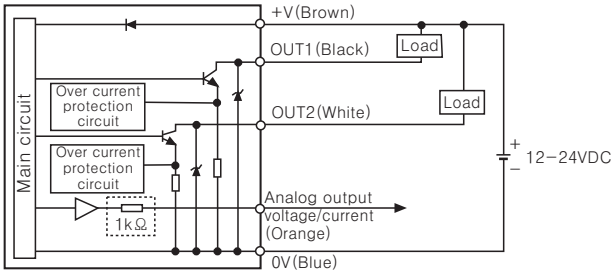

●PNP open collector output type

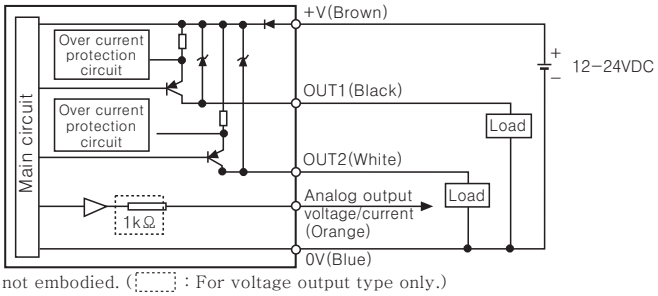

※In case of analog voltage output type models short-circuit protection is not embodied. (▭ : For voltage output type only.)
Do not connect with power source or load directly.
※Be careful with input impedance of connecting devices when using analog voltage output type models.
※Be careful with voltage drop due to cable resistance when extending sensor cable.

◎Hold / Auto Shift input (PSAN-□□□□H-□ type)

●NPN open collector output type

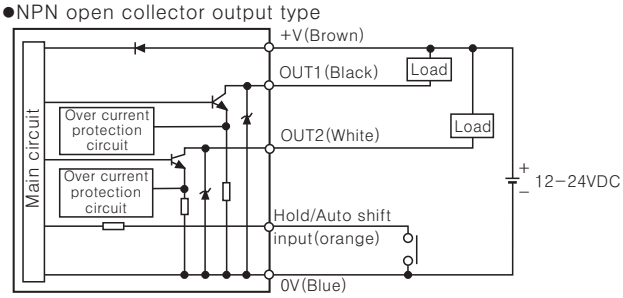

●PNP open collector output type

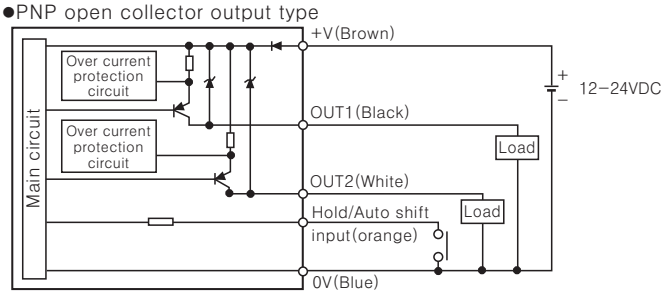

Digital pressure sensor(PSA/PSB Series)

▣Ordering information

PS A – V 01 C P – Rc1/8

Pressure port	Rc1/8	Standard(PSA Type)
	NPT1/8	Option(PSA Type)
	M5	Standard(PSB Type)
Output type	No mark	NPN open collector output
	P	PNP open collector output
Cable	No mark	Standard(Cable integrated type)
	(※1) C	Connector type
Pressure range	01	100kPa
	1	1MPa
Pressure type	No mark	Standard pressure type
	V	Vacuum pressure type
	C	Compound pressure type
Appearance	A	Regular square(30mm×30mm)
	B	Rectangular(10.2mm×54mm)
Item	PS	Pressure sensor

(※1) is only applied to PSB Series.

▣Specifications

Pressure type		Gauge pressure			
		Vacuum pressure type	Standard pressure type		Compound pressure type
Model	NPN output	**PSA-V01 PSB-V01 PSB-V01C**	**PSA-01 PSB-01 PSB-01C**	**PSA-1 PSB-1 PSB-1C**	**PSA-C01 PSB-C01 PSB-C01C**
	PNP output	**PSA-V01P PSB-V01P PSB-V01CP**	**PSA-01P PSB-01P PSB-01CP**	**PSA-1P PSB-1P PSB-1CP**	**PSA-C01P PSB-C01P PSB-C01CP**
Appearances & Dimensions		CE **PSA** [W30×H30×L38.5mm]		**PSB** **(Cable integral type)** **(Connector type)** [W54×H10.2×L25mm]	
Rated pressure range		**0.0 to -101.3kPa**	**0 to 100.0kPa**	**0 to 1,000kPa**	**-100.0 to 100kPa**
Display and set pressure range		5.0 to −101.3kPa	−5.0 to 110.0kPa	−50 to 1,100kPa	−101.2 to 110kPa
Max. pressure range		2 times of rated pressure		1.5 times of rated pressure	2 times of rated pressure
Applicable fluid		Air, Non−corrosive gas			
Power supply		12V−24VDC ±10%(Ripple P−P:Max. 10%)			
Current consumption		Max. 50mA			
Control output		• NPN open collector output ☞ Sink current : Max. 100mA, Applied voltage : Max. 30VDC, Residual voltage : Max. 1V • PNP open collector output ☞ Source current : Max. 100mA, Residual voltage : Max. 2V			
Hysteresis(※1)		1digit(2digit/psi) fixed			2digits fixed
Repeat error		±0.2% F.S. ±1digit			±0.2% F.S. ±2digits
Response time		Selectable 2.5ms, 5ms, 100ms, 500ms			
Short circuit protection		Built−in			
Analog output		• Output voltage : 1−5VDC ±2% F.S. • Zero point : Within 1VDC ±2% F.S. • Span : Within 4VDC ±2% F.S. • Linear : Within ±2% F.S. • Resolution : Approx. 1/200 • Output impedance : 1kΩ			
Display method		3½digit LED 7Segment			
Min. display interval		1digit(2digits/psi)			2digits
Pressure unit		kPa, kgf/cm², bar, psi, mmHg, mmH₂O, inHg	kPa, kgf/cm², bar, psi		kPa, kgf/cm², bar, psi, mmHg, mmH₂O, inHg
Characteristic of control output and displayed temp.		(※2) Max. ±1% F.S.			Max. ±2% F.S.
Analog output temperature characteristic		(※2) Max. ±2% F.S.			

(※1) F−1 : In F 1 mode, hysteresis is variable. (※2) Display pressure at 25℃ within 0 to 50℃. ※F.S.(Full Scale) is the rated pressure.
※The specification of pressure port is marked on the upper part of the case. Pressure ports are distinguished by the colors, silver[Rc(PT)1/8] or black[NPT1/8].

▣Rated pressure and max. pressure display range

Type	kPa	kgf/㎠	bar	psi	mmHg	inHg	mmH₂O
Vacuum pressure	**0 to -101.3** (5.0 to −101.3)	**0 to -1.033** (0.051 to −1.034)	**0 to -1.013** (0.05 to −1.013)	**0 to -14.70** (0.74 to −14.70)	**0 to -760** (38 to −760)	**0 to -29.9** (1.5 to −29.9)	**0 to -103.4** (5.2 to −103.4)
Positive pressure	**0 to 100.0** (−5.0 to 110.0)	**0 to 1.020** (−0.051 to 1.122)	**0 to 1.020** (−0.050 to 1.100)	**0 to 14.50** (−0.726 to 15.96)	——	——	——
	0 to 1000 (−50 to 1100)	**0 to 10.20** (−0.51 to 11.22)	**0 to 10.00** (−0.50 to 11.00)	**0 to 145.0** (−7.2 to 159.6)	——	——	——
Compound pressure	**100.0 to -100.0** (110.0 to −101.2)	**1.020 to -1.020** (1.122 to −1.034)	**1.020 to -1.020** (1.100 to −1.012)	**14.50 to -14.50** (15.96 to −14.70)	**750 to -750** (824 to −760)	**29.5 to -29.5** (32.6 to −29.9)	**102.1 to -103.4** (112.3 to −103.4)

※( ) is max. pressure display range. ※When using a unit mmH₂O, please multiply display value by 100.

Digital pressure sensor(PSA/PSB Series)

▣Dimensions

Unit:mm

◎PSA

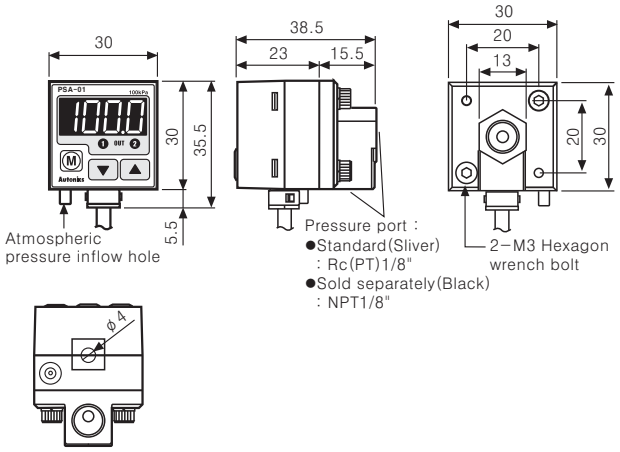

●Panel mounting bracke(PSA type)

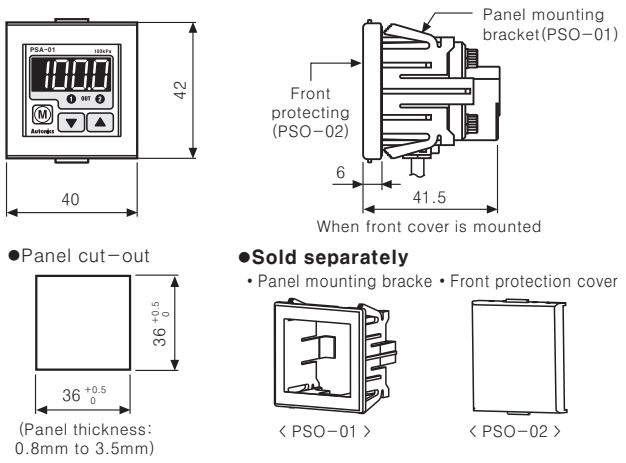

●Fixing bracket for mounting(PSA type)

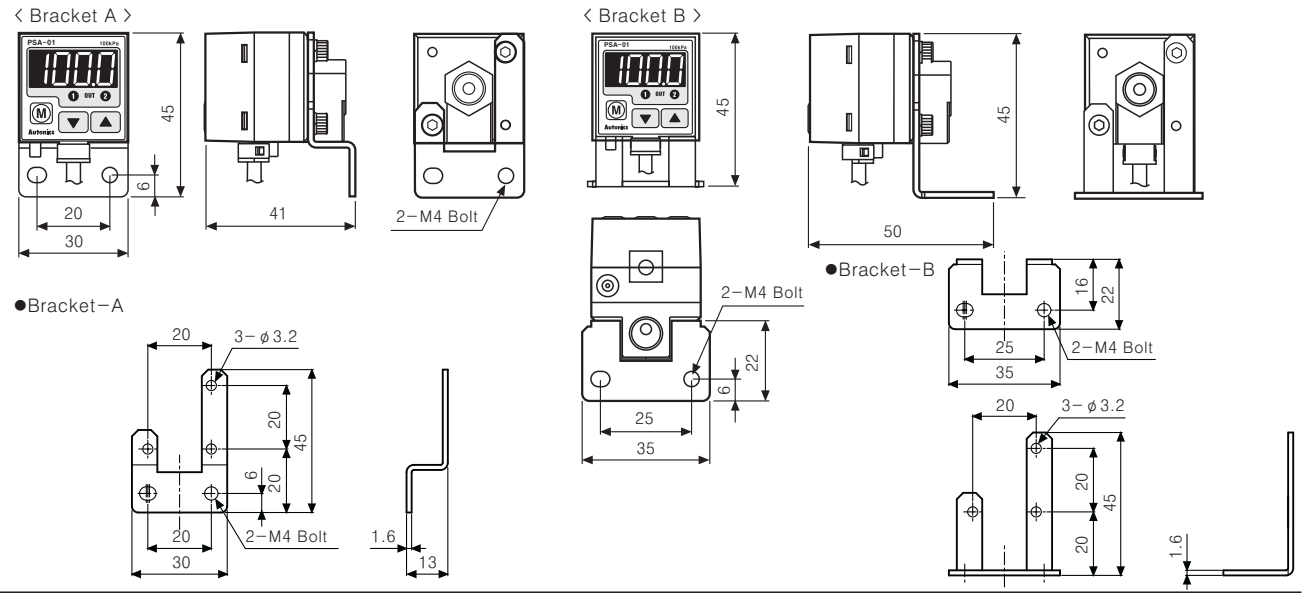

◎PSB

●Cable-integrated type

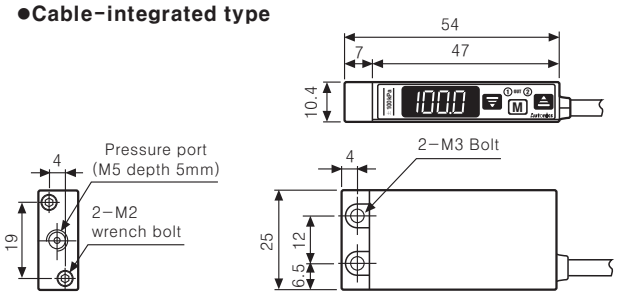

●Connector type

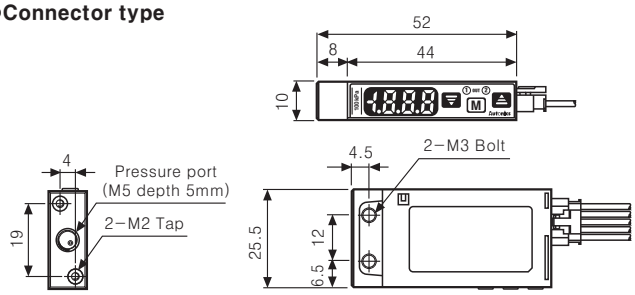

▣Control output diagram(PSA/PSB)

●NPN open collector output

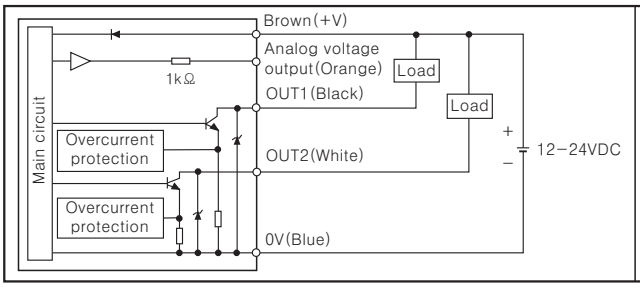

●PNP open collector output

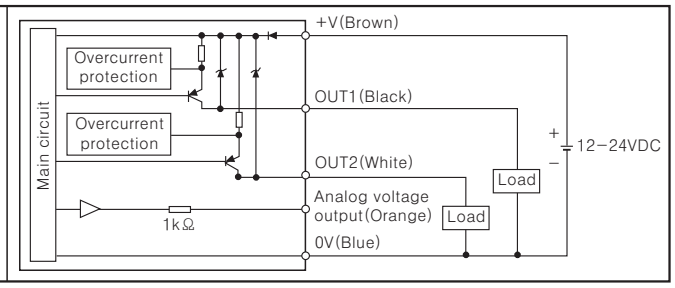

※There is no short-circuit protection in analog voltage output. Do not connect this output to power source or capacitive load directly.
※Please observe input impedance of connected equipment when use analog voltage output.
And be sure to check voltage drop caused by resistance of extended wire.

Incremental rotary encoder(E20 Series)

▣Ordering information

E20 [S] — 2 — 360 — 3 — N — 12 — R

Series	Shaft type	Hollow type	Pulse/1Revolution	Output phase	Output	Power supply	Cable
Diameter ϕ20mm, S:Shaft type HB:Hollow shaft built-in type	External 2 : ϕ2mm	Inner 2 : ϕ2mm 2.5 : ϕ2.5mm 3 : ϕ3mm	100, 200, 320, 360	3 : A, B, Z 6 : A, $\overline{A}$, B, $\overline{B}$, Z, $\overline{Z}$	N:NPN open collector output V:Voltage output L:Line driver output(※)	5 : 5VDC ±5% 12 : 12VDC ±5%	R:Rear side outgoing cable type S:Side outgoing cable type

※Standard : E20S2-[PULSE]-3-N-12-R
E20HB2-[PULSE]-3-N-12-R

※Standard:A, B, Z

※The power of Line driver is only for 5VDC

▣Specifications

Item			Diameter ϕ20mm shaft/hollow shaft buil-in type of incremental rotary encoder	
Model	NPN open collector output		**E20S2-□-□-N-□-□**	**E20HB□-□-□-N-□-□**
	Voltage output		**E20S2-□-□-V-□-□**	**E20HB□-□-□-V-□-□**
	Line driver output		**E20S2-□-□-L-5-□**	**E20HB□-□-□-L-5-□**
Appearances & Dimensions			CE (Except for Line driver output) [ϕ20mm, L30mm]	CE (Except for Line driver output) [ϕ20mm, L29mm]
Resolution(P/R)			100, 200, 320, 360 (Not indicated pulse and output type is customizable.)	
Electrical specification	Output phase		A, B, Z phase (Line driver output A, $\overline{A}$, B, $\overline{B}$, Z, $\overline{Z}$ phase)	
	Phase difference of output		Phase difference between A and B : $\frac{T}{4} \pm \frac{T}{8}$ (T=1cycle of A phase)	
	Control output	NPN open collector output	Load current : Max. 30mA, Residual voltage : Max. 0.4VDC	
		Voltage output	Load current : Max. 10mA, Residual voltage : Max. 0.4VDC	
		Line driver output	• Low ☞ Load current : Max. 20mA, Residual voltage : Max. 0.5VDC • High ☞ Load current : Max. −20mA, Output voltage : Min. 2.5VDC	
	Response time (Rise/Fall)	NPN open collector output	Max. 1㎲	• Measuring condition ☞ Cable length : 1m, I sink=Max. 20mA
		Voltage output	Max. 1㎲	
		Line driver output	Max. 0.5㎲	
	Max. Response frequency		100kHz	
	Power supply		• 5VDC ±5%(Ripple P-P : Max. 5%) • 12VDC ±5%(Ripple P-P : Max. 5%)	
	Current consumption		Max. 60mA(disconnection of the load), Line driver output:Max. 50mA(disconnection of the load)	
	Insulation resistance		Min. 100MΩ(at 500VDC megger between all terminals and case)	
	Dielectric strength		500VAC 50/60Hz for 1 minute(Between all terminals and case)	
	Connection		Cable outgoing type(Rear / Side)	
Mechanical specification	Starting torque		Max. 5gf · cm(5×10^{-4}N · m)	
	Moment of inertia		Max. 0.5g · cm² (5×10^{-8}kg · m²)	
	Shaft loading		Radial : 200gf, Thrust : 200gf	
	Max. allowable revolution		**(※1)** 6000rpm	
Vibration			1.5mm amplitude at frequency of 10 to 55Hz(for 1 min.) in each of X, Y, Z directions for 2 hours	
Shock			Max. 50G	
Ambient temperature			−10 to 70℃, Storage : −20 to 80℃(at non-freezing status)	
Ambient humidity			35 to 85%RH, Storage : 35 to 90%RH	
Protection			IP50(IEC standard)	
Cable			ϕ3mm, 5P(Line driver output : 8P), Length:1m, Shield cable	
Accessory			ϕ2mm Coupling(Shaft type), Bracket(Built-in type)	
Unit weight			Approx. 35g	

(※1) Max. allowable revolution ≧ Max. response revolution

【Max. response revolution(rpm)= $\frac{\text{Max. response frequency}}{\text{Resolution}}$ × 60 sec.】

Make sure that max. response revolution should be lower than max. allowable revolution when selecting the resolution.

Incremental rotary encoder(E20 Series)

▣Connections

●NPN open collector output / Voltage output

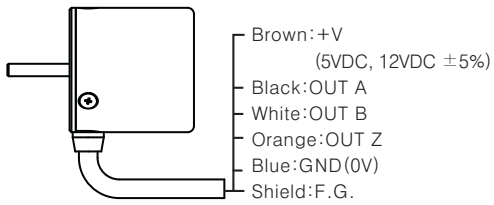

●Line driver output

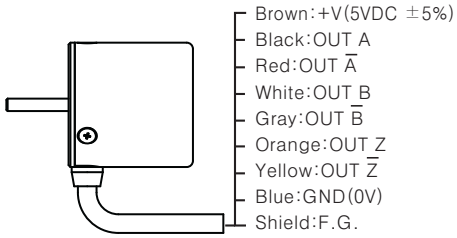

▣Dimensions

◎**Rear side outgoing cable type**

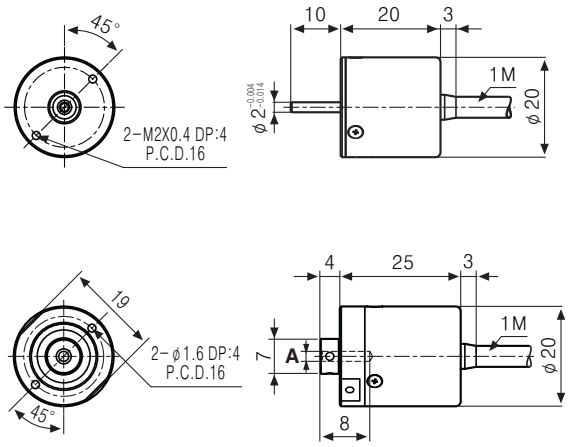

◎**Side outgoing cable type**

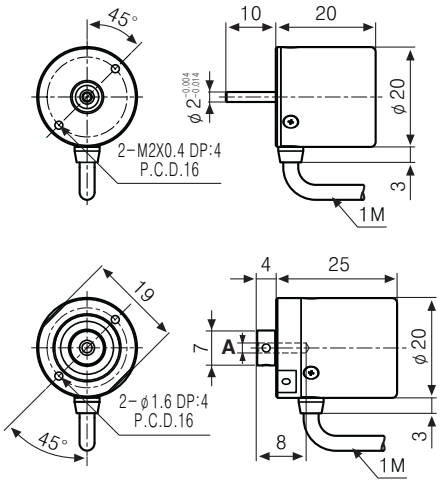

A	φ2	φ2.5	φ3
Tolerance	+0.014 +0.004		

●Bracket(E20HB)

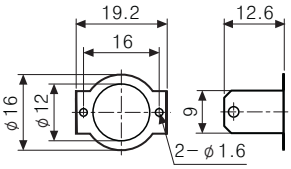

●Coupling(E20S)

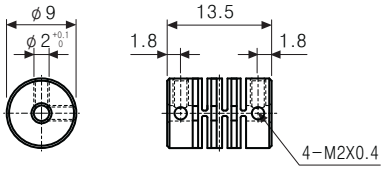

Unit:mm

Incremental rotary encoder(E30S/E40S/E40H/E40HB Series)

▣Ordering information

E30S	4	—	1024	—	3	—	N	—	24	—	No mark

Series	Shaft diameter	Pulse/1Revolution	Output phase	Output	Power supply	Cable
Diameter ϕ30mm, shaft type	ϕ4mm	Refer to resolution	3:A, B, Z(Standard) 6:A, $\overline{A}$, B, $\overline{B}$, Z, $\overline{Z}$	T:Totem pole output N:NPN open collector output V:Voltage output L:Line driver output(※)	5 :5VDC ±5% 24:12-24VDC ±5%	Blank:Normal type (※) C:Cable outgoing connector type

※The power of Line driver is only for 5VDC ※Cable length:250mm

E40 H	8	—	5000	—	3	—	N	—	24	—	No mark

Series	Shaft type	Hollow type	Pulse/1Revolution	Output phase	Output	Power supply	Cable
Diameter ϕ40mm S:Shaft type H:Hollow type HB:Hollow built-in type	External 6: ϕ6mm(※) 8: ϕ8mm	Inner 6: ϕ6mm 8: ϕ8mm(※) 10: ϕ10mm 12: ϕ12mm	Refer to resolution	2:A, B 3:A, B, Z(standard) 4:A, $\overline{A}$, B, $\overline{B}$ 6:A, $\overline{A}$, B, $\overline{B}$, Z, $\overline{Z}$	T:Totem pole output N:NPN open collector output V:Voltage output L:Line driver output(※)	5 :5VDC ±5% 24:12-24VDC ±5%	Blank:Normal type (※) C:Cable outgoing connector type

※Standard ※Cable length:250mm

▣Specifications

Item			ϕ30mm shaft type of incremental rotary encoder	ϕ40mmshaft type of incremental rotary encoder	ϕ40mm hollow type of incremental rotary encoder	
Model	Totem pole output		E30S4-□-3-T-□-□	E40S□-□-□-T-□-□	E40H□-□-□-T-□-□	E40HB□-□-□-T-□-□
	NPN open collector output		E30S4-□-3-N-□-□	E40S□-□-□-N-□-□	E40H□-□-□-N-□-□	E40HB□-□-□-N-□-□
	Voltage output		E30S4-□-3-V-□-□	E40S□-□-□-V-□-□	E40H□-□-□-V-□-□	E40HB□-□-□-V-□-□
	Line driver output		E30S4-□-6-L-5-□	E40S□-□-□-L-5-□	E40H□-□-□-L-5-□	E40HB□-□-□-L-5-□
Appearances & Dimensions			CE (Except for Line driver output) [ϕ30mm, L42.5mm]	CE (Except for Line driver output) [ϕ40mm, L51mm]	CE (Except for Line driver output) [ϕ40mm, L40mm]	CE (Except for Line driver output) [ϕ40mm, L40mm]
Resolution(P/R)			100, 200, 360, 500, 1000, 1024, 3000	(※1) *1, *2 ,*5, 10, *12, 15, 20, 23, 25, 30, 35, 40, 45, 50, 60, 75, 100, 120, 125, 150, 192, 200, 240, 250, 256, 300, 360, 400, 500, 512, 600, 800, 1000, 1024, 1200, 1500, 1800, 2000, 2048, 2500, 3000, 3600, 5000		
			Not indicated resolution is customizable.			
Electrical specification	Output phase		A, B, Z phase (Line driver output A, $\overline{A}$, B, $\overline{B}$, Z, $\overline{Z}$ phase)			
	Phase difference of output		Output between A and B phase : $\frac{T}{4} \pm \frac{T}{8}$ (T=1cycle of A phase)			
	Control output	Totem pole output	• Low ☞ Load current:Max. 30mA, Residual voltage : Max. 0.4VDC • High ☞ Load current:Max. 10mA, Output voltage(Power supply 5VDC):Min. (Power supply-2.0)VDC, Output voltage(Power supply 12-24VDC):Min. (Power supply-3.0)VDC			
		NPN open collector output	Load current : Max. 30mA, Residual voltage : Max. 0.4VDC			
		Voltage output	Load current : Max. 10mA, Residual voltage : Max. 0.4VDC			
		Line driver output	Low ☞ Load current : Max. 20mA, Residual voltage : Max. 0.5VDC High ☞ Load current : Max. -20mA, Output voltage : Min. 2.5VDC			
	Response time (Rise/Fall)	Totem pole output	Max. 1㎲			• Measuring condition ☞ Cable length:2m, I sink=Max. 20mA
		NPN open collector output	Max. 1㎲			
		Voltage output	Max. 1㎲(5VDC : Output resistance 820Ω), Max. 2㎲(12-24VDC : Output resistance 4.7kΩ)	Max. 1㎲		
		Line driver output	Max. 0.5㎲			
	Max. Response frequency		300kHz			
	Power supply		• 5VDC ±5%(Ripple P-P:Max. 5%) • 12-24VDC ±5%(Ripple P-P:Max. 5%)			
	Current consumption		Max. 80mA(disconnection of the load), Line driver output:Max. 50mA(disconnection of the load)			
	Insulation resistance		Min. 100MΩ(at 500VDC megger)			
	Dielectric strength		750VAC 50/60Hz for 1 minute(Between all terminals and case)			
	Connection		Cable outgoing type, 250mm cable outgoing connector type			
Mechanical specification	Starting torque		Max. 20gf·cm(0.002N·m)	Max. 40gf·cm(0.004N·m)	Max. 50gf·cm(0.005N·m)	
	Rotor inertia		Max. 20g·cm²(2×10⁻⁶kg·m²)	Max. 40g·cm²(4×10⁻⁶ kg·m²)		
	Shaft loading		Radial : Max. 2kgf, Thrust : Max. 1kgf			
	Max. allowable revolution		(※2) 5000rpm			
Vibration			1.5mm amplitude at frequency of 10 to 55Hz(for 1 min.) in each of X, Y, Z directions for 2 hours			
Shock			Max. 50G			
Ambient temperature			-10 to 70℃, Storage:-25 to 85℃(at non-freezing status)			
Ambient humidity			35 to 85%RH, Storage: 35 to 90%RH			
Protection			IP50(IEC standard)			
Cable			ϕ5mm, 5P, Length:2m, Shield cable(Line driver: ϕ5mm, 8P)			
Accessory			ϕ4mm coupling	• Shaft type: ϕ6mm coupling standard, ϕ8mm coupling(Sold separately) • Hole type:Bracket		
Unit weight			Approx. 80g	Approx. 160g		

(※1) '*' pulse is only for A, B phase(Line Driver output is for A, $\overline{A}$, B, $\overline{B}$ phase)

(※2)Max. allowable revolution ≥ Max. response revolution 【Max. response revolution(rpm) = $\frac{\text{Max. response frequency}}{\text{Resolution}}$ ×60 sec.】

Make sure that max. response revolution should be lower than max. allowable revolution when selecting the resolution.

Incremental rotary encoder(E30S/E40S/E40H/E40HB Series)

▣Connections

◎Normal type

●Totem pole output / NPN open collector output / Voltage output

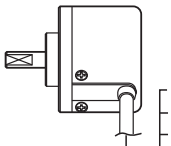

- Black:OUT A
- White:OUT B
- Orange:OUT Z
- Brown:+V(5VDC, 12−24VDC ±5%)
- Blue:GND(0V)
- Shield:F.G.

●Line driver output

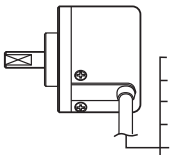

- Black:OUT A
- Red:OUT $\overline{A}$
- White:OUT B
- Gray:OUT $\overline{B}$
- Orange:OUT Z
- Yellow:OUT $\overline{Z}$
- Brown:+V(5VDC ±5%)
- Blue:GND(0V)
- Shield:F.G.

※Unused wires must be insulated.
※The metal and shield cable of encoder should be grounded(F.G.)

◎Cable outgoing connector type

●Totem pole output / NPN open collector output / Voltage output

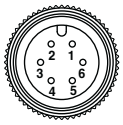

●Line driver output

Totem pole output/ NPN open collector output/ Voltage output			Line driver output		
Pin No	Function	Cable color	Pin No	Function	Cable color
①	OUT A	Black	①	OUT A	Black
②	OUT B	White	②	OUT $\overline{A}$	Red
③	OUT Z	Orange	③	+V	Brown
④	+V	Brown	④	GND	Blue
⑤	GND	Blue	⑤	OUT B	White
⑥	F.G.	Shield	⑥	OUT $\overline{B}$	Gray
			⑦	OUT Z	Orange
			⑧	OUT $\overline{Z}$	Yellow
			⑨	F.G.	Shield

※F.G.(Field Ground):It should be grounded separately.

▣Dimensions

◎Normal type

●E30S

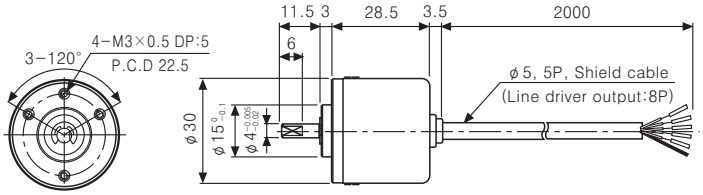

●E40H

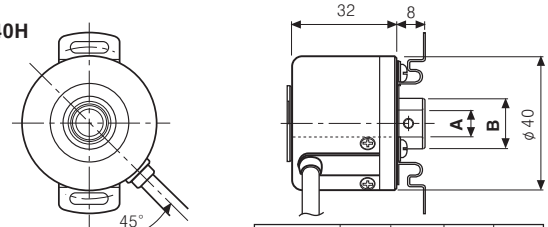

A	ϕ6	ϕ8	ϕ10	ϕ12
Tolerance	+0.015 / 0			
B	ϕ15		ϕ17	

●E40S

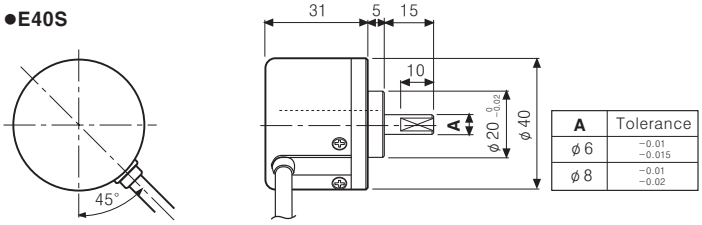

A	Tolerance
ϕ6	−0.01 / −0.015
ϕ8	−0.01 / −0.02

●E40HB

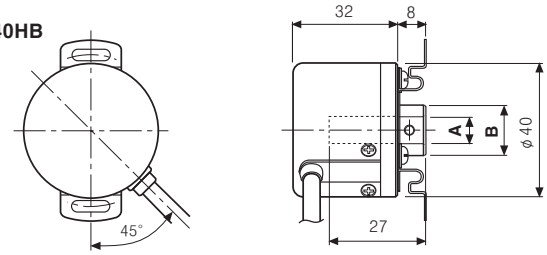

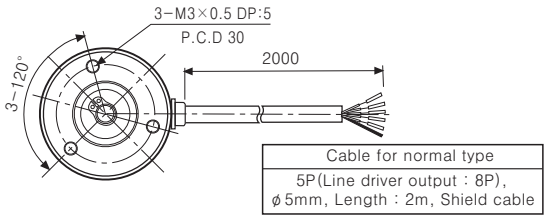

Cable for normal type
5P(Line driver output : 8P), ϕ5mm, Length : 2m, Shield cable

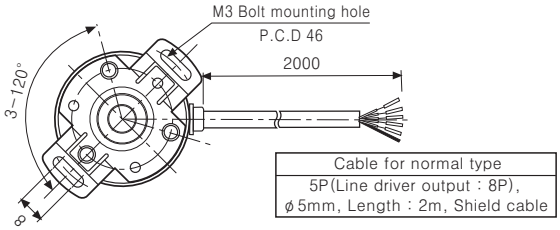

Cable for normal type
5P(Line driver output : 8P), ϕ5mm, Length : 2m, Shield cable

◎Cable outgoing connector type

●E30S

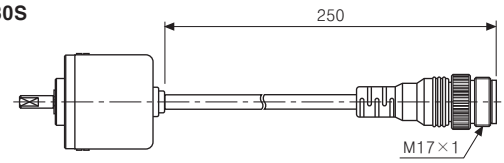

●E40S/ E40H/ E40HB

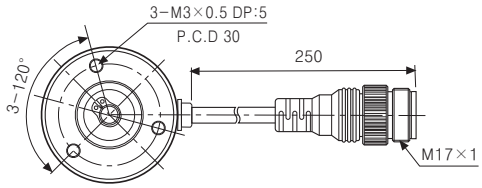

Unit:mm

◎Connector cable(Accessory)

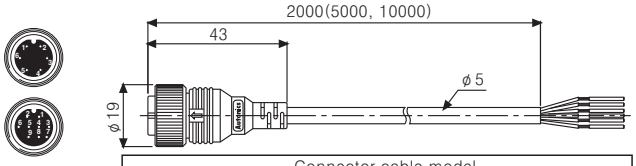

Connector cable model	
Line driver output	**CID9S-2(Standard), CID9S-5, CID9S-10**
Etc.	**CID6S-2(Standard), CID6S-5, CID6S-10**

◎Coupling(E30S, E40S)

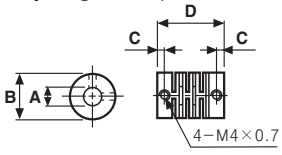

Coupling	A	B	C	D
ϕ4mm	ϕ4	ϕ13	2.7	21
ϕ6mm	ϕ6	ϕ15	2.8	22
ϕ8mm	ϕ8	ϕ19	3.4	25

Unit:mm

Incremental rotary encoder(E50S Series)

▣Ordering information

E50S	8	—	5000	—	3	—	N	—	24	—	No mark

Series	Shaft diameter	Pulse/1Revolution	Output phase	Output	Power supply	Cable
Diameter ϕ50mm, shaft type	ϕ8mm	Refer to resolution	2:A, B 3:A, B, Z (Standard) 4:A, $\overline{A}$, B, $\overline{B}$ 6:A, $\overline{A}$, B, $\overline{B}$, Z, $\overline{Z}$	T:Totem pole output N:NPN open collector output V:Voltage output L:Line driver output(※)	5:5VDC ±5% 24:12-24VDC ±5%	Blank:Normal type C:Cable outgoing connector type(※) CR:Rear side outgoing connector integrated type CS:Side outgoing connector integrated type

※Cable length:250mm

▣Specifications

Item				
Model	Totem pole output		E50S8-□-□-T-5-□	E50S8-□-□-T-24-□
	NPN open collector output		E50S8-□-□-N-5-□	E50S8-□-□-N-24-□
	Voltage output		E50S8-□-□-V-5-□	E50S8-□-□-V-24-□
	Line driver output		E50S8-□-□-L-5-□	———
Appearances & Dimensions			CE (Except for Line driver output) [ϕ50mm, L58.3mm]	
Resolution(P/R)			(※1) *1, *2 ,*5, 10, *12, 15, 20, 23, 25, 30, 35, 40, 45, 50, 60, 75, 100, 120, 125, 150, 192, 200, 240, 250, 256, 300, 360, 400, 500, 512, 600, 800, 1000, 1024, 1200, 1500, 1800, 2000, 2048, 2500, 3000, 3600, 5000, 6000, 8000 (Not indicated resolution is customizable.)	
Electrical specification	Output phase		A, B, Z phase(Line driver : A, $\overline{A}$, B, $\overline{B}$, Z, $\overline{Z}$ phase)	
	Phase difference of output		Output between A and B phase : $\frac{T}{4} \pm \frac{T}{8}$ (T=1cycle of A phase)	
	Control output	Totem pole output	• Low ☞ Load current:Max. 30mA, Residual voltage : Max. 0.4VDC • High ☞ Load current:Max. 10mA, Output voltage(Power supply 5VDC):Min. (Power supply-2.0)VDC, Output voltage(Power supply 12-24VDC):Min. (Power supply-3.0)VDC	
		NPN open collector output	Load current : Max. 30mA, Residual voltage : Max. 0.4VDC	
		Voltage output	Load current : Max. 10mA, Residual voltage : Max. 0.4VDC	
		Line driver output	• Low ☞ Load current : Max. 20mA, Residual : Max. 0.5VDC • High ☞ Load current : Max. -20mA, Output voltage(Power supply 5VDC) : Min. 2.5VDC, Output voltage(Power voltage 12-24VDC) : Min. (Power supply-3.0)VDC	
	Response time (Rise/Fall)	Totem pole output	Max. 1㎲	• Measuring condition ☞ Cable length : 2m, I sink = Max. 20mA
		NPN open collector output	Max. 1㎲	
		Voltage output	Max. 1㎲	
		Line driver output	Max. 0.5㎲	
	Max. Response frequency		300kHz	
	Power supply		• 5VDC ±5%(Ripple P-P:Max. 5%) • 12-24VDC ±5%(Ripple P-P:Max. 5%)	
	Current consumption		Max. 80mA(disconnection of the load), Line driver output:Max. 50mA(disconnection of the load)	
	Insulation resistance		Min. 100MΩ(at 500VDC megger between all terminals and case)	
	Dielectric strength		750VAC 50/60Hz for 1 minute(Between all terminals and case)	
	Connection		Cable outgoing type, 200mm cable outgoing connector type, Connector integrated type (Rear, Side)	
Mechanical specification	Starting torque		Max. 70gf · cm(0.007N · m)(※2) / Max. 800gf · cm(0.08N · m)(※3)	
	Rotor inertia		Max. 80g · cm²(8×10^{-6} kg · m²)(※2) / Max. 400gf · cm²(4×10^{-5} kg · m²)(※3)	
	Shaft loading		Radial : Max. 10kgf, Thrust : Max. 2.5kgf	
	Max. allowable revolution		(※4) 5000rpm	
Vibration			1.5mm amplitude at frequency of 10 to 55Hz(for 1 min.) in each of X, Y, Z directions for 2 hours	
Shock			Max. 75G	
Ambient temperature			-10 to 70℃, Storage:-25 to 85℃(at non-freezing status)	
Ambient humidity			35 to 85%RH, Storage: 35 to 90%RH	
Protection			Normal type, Cable outgoing connector type: IP50(IEC standard)(※5), Connector integrated type: IP65(IEC standard)	
Cable			5P, ϕ5mm, Length : 2m, Shield cable(Line driver output : 8P, ϕ5mm)	
Accessory			ϕ8mm coupling bracket	
Unit weight			Approx. 275g, Connector integrated type:180g	

(※1) '*' pulse is only for A, B phase(Line driver output is for A, $\overline{A}$, B, $\overline{B}$ phase).
(※2) This value is for normal type, cable outgoing connector type (Protection: IP50).
(※3) This value is for normal type, cable outgoing connector type (Protection: IP64)/connector integrated type (Protection: IP65)
(※4) Make sure that max. response revolution should be lower than or equal to max. allowable revolution when selecting the resolution.

【Max. response resolution(rpm) = $\frac{\text{Max. response frequency}}{\text{Resolution}} \times 60$ sec.】

(※5) 'Normal type, cable outgoing connector type is option as IP64 protection.

Incremental rotary encoder(E50S Series)

▣Connections

◎Normal type

●Totem pole output / NPN open collector output / Voltage output

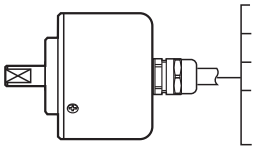

- Black:OUT A
- White:OUT B
- Orange:OUT Z
- Brown:+V(5VDC, 12−24VDC ±5%)
- Blue:GND(0V)
- Shield:F.G.

●Line driver output

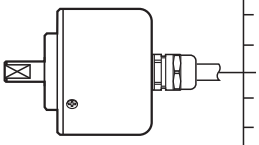

- Black:OUT A
- Red:OUT $\overline{A}$
- White:OUT B
- Gray:OUT $\overline{B}$
- Orange:OUT Z
- Yellow:OUT $\overline{Z}$
- Brown:+V(5VDC, 12−24VDC ±5%)
- Blue:GND(0V)
- Shield:F.G.

※Unused wires must be insulated.
※The metal and shield cable of encoder should be grounded(F.G.)

◎Cable outgoing connector / Connector integrated type

●Totem pole output / NPN open collector output / Voltage output

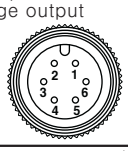

●Line driver output

Totem pole output/ NPN open collector output/ Voltage output			Line driver output		
Pin No	Function	Cable color	Pin No	Function	Cable color
①	OUT A	Black	①	OUT A	Black
②	OUT B	White	②	OUT $\overline{A}$	Red
③	OUT Z	Orange	③	+V	Brown
④	+V	Brown	④	GND	Blue
⑤	GND	Blue	⑤	OUT B	White
⑥	F.G.	Shield	⑥	OUT $\overline{B}$	Gray
			⑦	OUT Z	Orange
			⑧	OUT $\overline{Z}$	Yellow
			⑨	F.G.	Shield

※F.G.(Field Ground) : It should be grounded separately.

▣Dimensions

◎Normal type

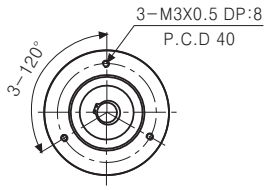

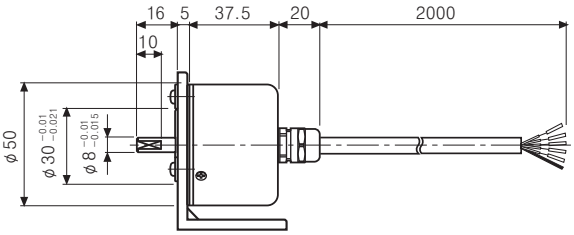

Cable for normal type
φ5mm, 5P(Line driver output:8P), Length:2000, Shield cable

◎Rear side outgoing connector integrated type

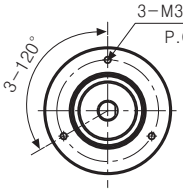

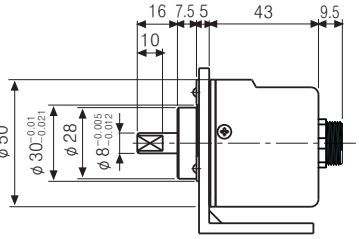

◎Side outgoing connector integrated type

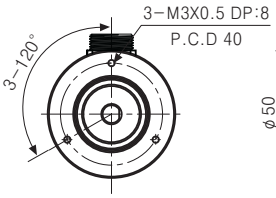

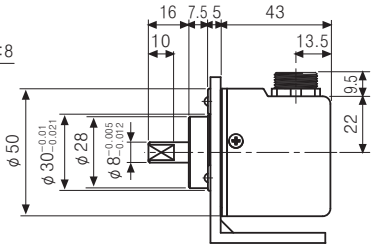

◎Cable outgoing connector type

●Connector cable(Accessory)

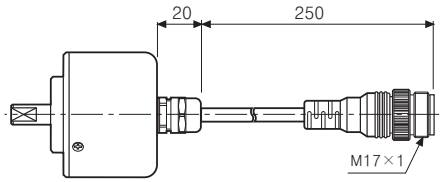

*The connector cable is customizable.

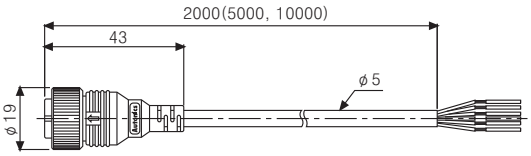

Connector cable model	
Line driver output	**CID9S-2(Standard), CID9S-5, CID9S-10**
Etc.	**CID6S-2(Standard), CID6S-5, CID6S-10**

●Bracket

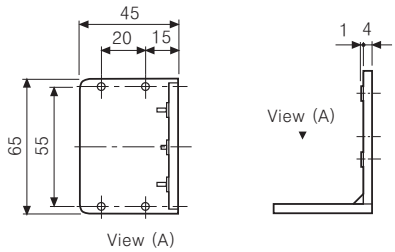

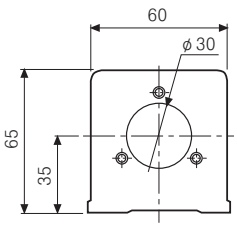

●Coupling

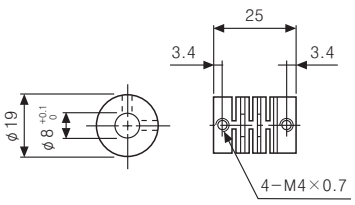

Unit:mm

Incremental rotary encoder(E58 Series)

▣Ordering information

E58SC	10	8000	3	N	24	No mark
Series Diameter ϕ58mm	Shaft diameter	Pulse/ 1Revolution	Output phase	Output	Power supply	Cable
SC:Shaft Clamping	10 ϕ10mm	Refer to resolution	2:A, B 3:A, B, Z (Standard) 4:A, $\overline{A}$, B, $\overline{B}$ 6:A, $\overline{A}$, B, $\overline{B}$, Z, $\overline{Z}$	T:Totem pole output N:NPN open collector output V:Voltage output L:Line driver output	5:5VDC±5% 24:12-24VDC ±5%	Blank:Normal type C:Cable outgoing connector type(250mm) CR:Rear side outgoing connector integrated type CS:Side outgoing connector integrated type
SS:Shaft Synchro	6 ϕ6mm					
H:Hollow	12 ϕ12mm					
HB:Hollow built-in						

※Standard cable for shaft/built-in encoder is axial connector type cable.
Standard cable for hollow shaft encoder is radial connector type cable.
※Customizable model specifications are available.

※The power of Line driver is only for 5VDC.

▣Specifications

Item			Diameter ϕ58mm shaft type/hollow type/hollow built-in type of incremental rotary encoder			
Model	Totem pole output		E58SC10-□□□□-3-T-□	E58SS6-□□□□-3-T-□	E58H12-□□□□-3-T-□	E58HB12-□□□□-3-T-□
	NPN open collector output		E58SC10-□□□□-3-N-□	E58SS6-□□□□-3-N-□	E58H12-□□□□-3-N-□	E58HB12-□□□□-3-N-□
	Voltage output		E58SC10-□□□□-3-V-□	E58SS6-□□□□-3-V-□	E58H12-□□□□-3-V-□	E58HB12-□□□□-3-V-□
	Line driver output		E58SC10-□□□□-6-L-5	E58SS6-□□□□-6-L-5	E58H12-□□□□-6-L-5	E58HB12-□□□□-6-L-5
Appearances & Dimensions			CE (Except for Line driver output) [ϕ58mm, L79.5mm]	CE (Except for Line driver output) [ϕ58mm, L63.5mm]	CE (Except for Line driver output) [ϕ58mm, L55.5mm]	CE (Except for Line driver output) [ϕ58mm, L55.5mm]
Resolution(P/R)			(※1) *1, *2, *5, 10, *12, 15, 20, 23, 25, 30, 35, 40, 45, 50, 60, 75, 100, 120, 125, 150, 192, 200, 240, 250, 256, 300, 360, 400, 500, 512, 600, 800, 1000, 1024, 1200, 1500, 1800, 2000, 2048, 2500, 3000, 3600, 5000, 6000, 8000			
Electrical specification	Output phase		A, B, Z phase(Line driver output : A, $\overline{A}$, B, $\overline{B}$, Z, $\overline{Z}$ phase)			
	Phase difference of output		Phase difference between A and B phase : $\frac{T}{4}\pm\frac{T}{8}$(T=1 cycle of A phase)			
	Control output	Totem pole output	• Low ☞ Load current : Max. 30mA, Residual voltage : Max. 0.4VDC • High ☞ Load current : Max. 10mA, Output voltage(Power voltage 5VDC) : Min. (Power voltage-2.0)VDC, Output voltage(Power voltage 12-24VDC) : Min. (Power voltage-3.0)VDC			
		NPN open collector output	Load current : Max. 30mA, Residual voltage : Max. 0.4VDC			
		Voltage output	Load current : Max. 10mA, Residual voltage : Max. 0.4VDC			
		Line driver output	• Low ☞ Load current : Max. 20mA, Residual voltage : Max. 0.5VDC • High ☞ Load current : Max. -20mA, Output voltage : Min. 2.5VDC			
	Response time (Rise/Fall)	Totem pole output	Max. 1μs		• Measuring condition ☞ Cable length : 2m, I sink = Max. 20mA	
		NPN open collector output	Max. 1μs			
		Voltage output	Max. 1μs			
		Line driver output	Max. 0.5μs			
	Max. Response frequency		300kHz			
	Power supply		• 5VDC ±5%(Ripple P-P:Max. 5%) • 12-24VDC ±5%(Ripple P-P:Max. 5%)			
	Current consumption		Max. 80mA(disconnection of the load), Line driver output : Max. 50mA(disconnection of the load)			
	Insulation resistance		Min. 100MΩ(at 500VDC megger between all terminals and case)			
	Dielectric strength		750VAC 50/60Hz for 1 minute(Between all terminals and case)			
	Connection		Cable outgoing type, Cable outgoing connector type, Connector integrated type(axial, radial)			
Mechanical specification	Starting torque		Max. 40gf · cm(0.004N · m)		Max. 90gf · cm(0.009N · m)	
	Moment of inertia		Max. 15g · cm²(1.5×10⁻⁶ kg · m²)		Max. 20g • cm²(2×10⁻⁶ kg • m²)	
	Shaft loading		Max. Radial : 10kg · f, Thrust : Max. 2.5kg · f		Max. Radial : 2kg · f, Thrust : Max. 1kg · f	
	Max. allowable revolution		(※2) 5000rpm			
Vibration			1.5mm amplitude at frequency of 10 to 55Hz(for one minute cycle) in each of X, Y, Z directions for 2 hours			
Shock			Max. 75G			
Ambient temperature			-10 to 70℃, Storage : -25 to 85℃(at non-freezing status)			
Ambient humidity			35 to 85%RH, Storage : 35 to 90%RH			
Protection			IP50(IEC standard)			
Cable			ϕ5mm, 5P, Length:2m, Shield cable(Line driver output: ϕ5mm, 8P)			
Accessory			ϕ10mm(SC type)/ϕ6mm(SS type) coupling, Fixing bracket			
Unit weight			• SC-CS/CR type:Approx. 230g, SS-CS/CR type:Approx. 205g, HB-CS/CR type:Approx. 200g • SC type:Approx. 310g, SS type:Approx. 285g, HB type:Approx. 270g, H type:Approx. 270g			

(※1) 1, 2, 5 12 P/R are output A and B phase only.(But Line driver output : A, $\overline{A}$, B, $\overline{B}$ phase)
[In case of hollow shaft type, 6000, 8000 P/R excluded]

(※2) Max. allowable revolution ≥ Max. response revolutio 【Max. response revolution(rpm) = $\frac{\text{Max. response frequency}}{\text{Resolution}}$ ×60 sec.】
Make sure that max. response revolution should be lower than max. allowable revolution when selecting the resolution.

Incremental rotary encoder(E58 Series)

▣Connections

◎Normal type

●Totem pole output / NPN open collector output / Voltage output

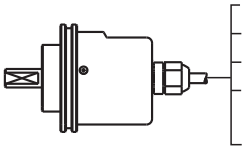

- Black:OUT A
- White:OUT B
- Orange:OUT Z
- Brown:+V(5VDC, 12−24VDC ±5%)
- Blue:GND(0V)
- Shield:F.G.

●Line driver output

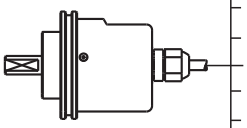

- Black:OUT A
- Red:OUT $\overline{A}$
- White:OUT B
- Gray:OUT $\overline{B}$
- Orange:OUT Z
- Yellow:OUT $\overline{Z}$
- Brown:+V(5VDC ±5%)
- Blue:GND(0V)
- Shield:F.G.

※Unused wires must be insulated.
※The metal and shield cable of encoder should be grounded(F.G.)

◎Cable outgoing connector / Connector integrated type

●Totem pole output / NPN open collector output / Voltage output

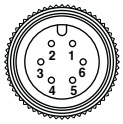

●Line driver output

Totem pole output/ NPN open collector output/ Voltage output			Line driver output		
Pin No	Function	Cable color	Pin No	Function	Cable color
①	OUT A	Black	①	OUT A	Black
②	OUT B	White	②	OUT $\overline{A}$	Red
③	OUT Z	Orange	③	+V	Brown
④	+V	Brown	④	GND	Blue
⑤	GND	Blue	⑤	OUT B	White
⑥	F.G.	Shield	⑥	OUT $\overline{B}$	Gray
			⑦	OUT Z	Orange
			⑧	OUT $\overline{Z}$	Yellow
			⑨	F.G.	Shield

※F.G.(Field Ground) : It should be grounded separately.

▣Dimensions

◎Shaft clamping type

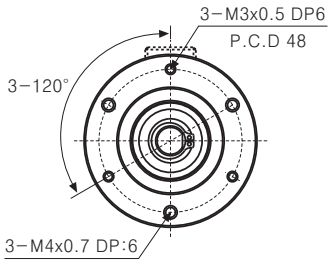

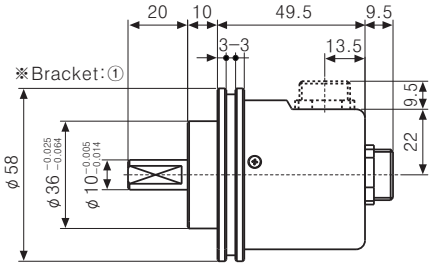

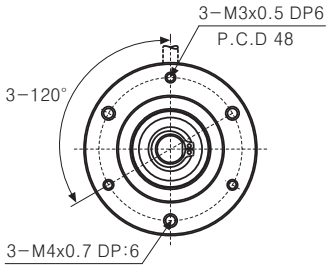

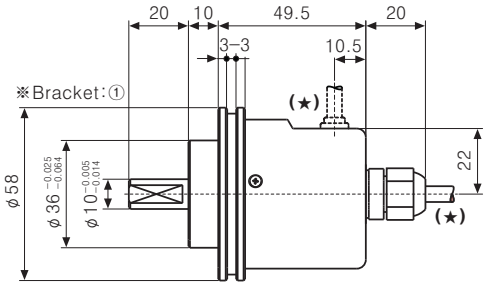

※(★)

Cable for normal type
φ5, 5P(Line driver output:8P), Length:2000, Shield cable

◎Shaft synchro type

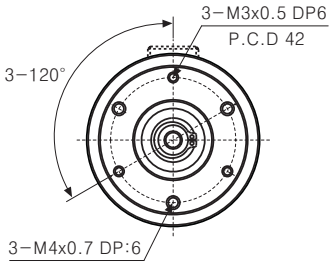

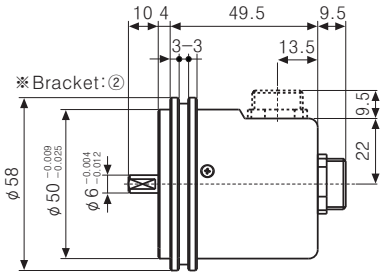

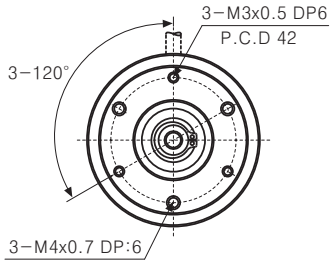

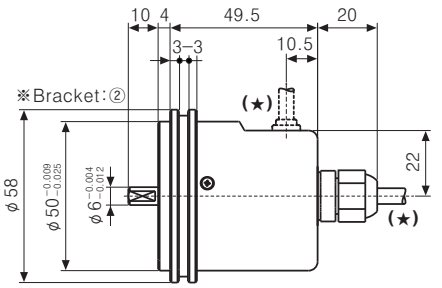

※(★)

Cable for normal type
φ5, 5P(Line driver output:8P), Length:2000, Shield cable

Unit:mm

Incremental rotary encoder(E58 Series)

▣Dimensions

◎Hollow type

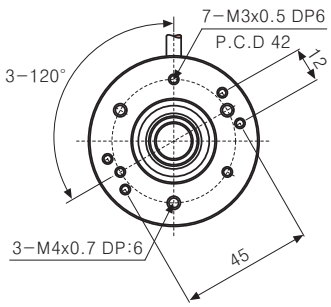

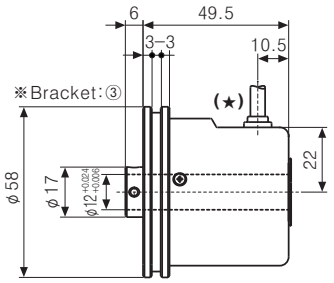

※(★)

Cable for normal type
ϕ5, 5P(Line driver output:8P), Length:2000, Shield cable

◎Hollow built-in type

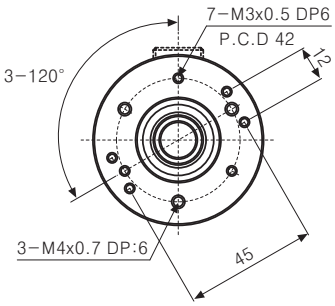

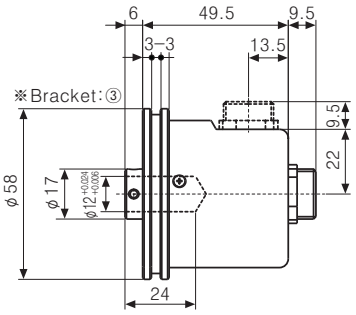

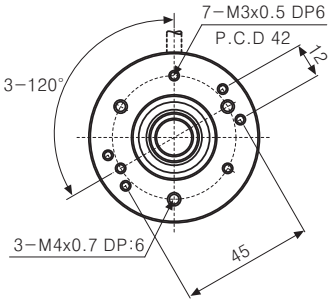

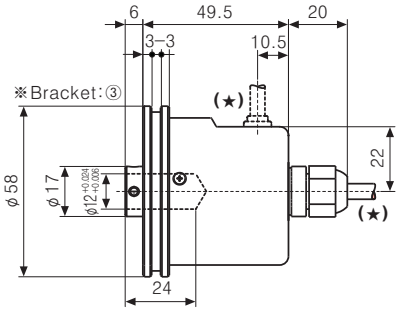

※(★)

Cable for normal type
ϕ5, 5P(Line driver output:8P), Length:2000, Shield cable

●Cable outgoing connector type

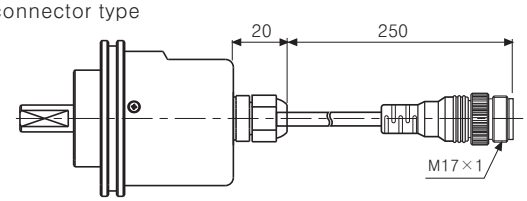

*The connector cable is customizable.

●Bracket

※SC type:①

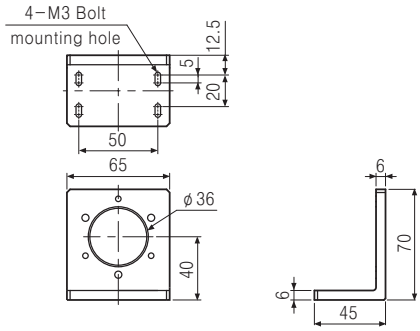

※SS type:②

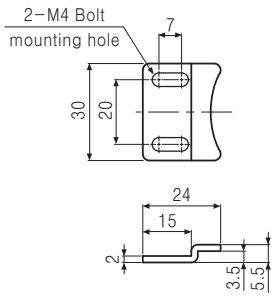

※HB/H type:③

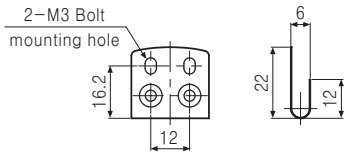

● ϕ10 Coupling(E58SC10)

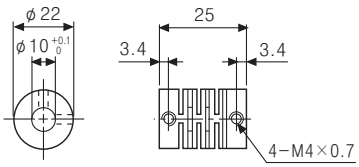

● ϕ8 Coupling(E58SS6)

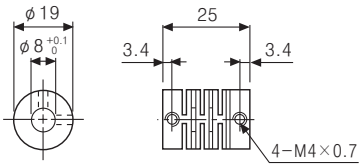

Unit:mm

Incremental rotary encoder(E68S Series)

▣Ordering information

E68S	15	1024	6	L	5
Series	Shaft diameter	Pulse/1Revolution	Output phase	Output	Power supply
Diameter ϕ68mm, shaft type	ϕ15mm	1024 P/R	6 : A, $\overline{A}$, B, $\overline{B}$, Z, $\overline{Z}$	L : Line driver output	5VDC ±5%

▣Specifications

Item		Diameter ϕ68mm shaft type of incremental rotary encoder
Model	Line driver output	**E68S15 - 1024 - 6 - L-5**
Appearances & Dimensions		[ϕ68mm, L123mm]
Resolution(P/R)		1024 (Not indicated resolution is customizable.)
Electrical specification	Output phase	A, $\overline{A}$, B, $\overline{B}$, Z, $\overline{Z}$ phase
	Phase difference of output	Phase defference between A and B phase : $\frac{T}{4} \pm \frac{T}{8}$(T=1cycle of A phase)
	Output Duty rate	• A, B phase Duty ratio : $\frac{T}{2} \pm \frac{T}{8}$ • Z phase Duty ratio : T $\pm \frac{T}{4}$
	Control output	• Low ☞ Load current : Max. 20mA, Residual voltage : Max. 0.5VDC • High ☞ Load current : Max. −20mA, Output voltage : Min. 2.5VDC
	Response time(Rise/Fall)	Max. 0.5μs (Cable:1m, I sink = 20mA)
	Power supply	5VDC ± 5%(Ripple P−P : Max. 5%)
	Max. Response frequency	180kHz
	Current consumption	Max. 50mA
	Insulation resistance	Min. 100MΩ (at 500VDC megger between all terminals and case)
	Dielectric strength	750VAC 50/60Hz for 1 minute(Between all terminals and case)
	Connection	Connector connection(MS3102A20−29P)
Mechanical specification	Starting torque	1.5kgf · cm(Max. 0.15N · m)
	Shaft loading	Radial : 20kgf, Thrust : 10kgf
	Max. allowable revolution	**(※1)** 6,500rpm
Vibration		1.5mm amplitude at frequency of 10 to 55Hz(for 1 min.) in each of X, Y, Z directions for 2 hours
Shock		Max. 50G
Ambient temperature		−10 to 70℃, Storage:−25 to 85℃(at non−freezing status)
Ambient humidity		35 to 85%RH, Storage: 35 to 90%RH
Protection		IP64(IEC standard)
Unit weight		Approx. 550g

(※1) Max. allowable revolution ≧ Max. response revolution 【Max. response revolution(rpm) = $\frac{\text{Max. response frequency}}{\text{Resolution}} \times 60$ sec.】
Make sure that max. response revolution should be lower than max. allowable revolution when selecting the resolution.

▣Connections

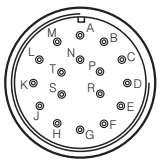

Pin No.	Cable color	Pin No.	Cable color
A	A phase	K	0V
B	Z phase	L	N.C.
C	B phase	M	0V
D	N.C.	N	$\overline{A}$ phase
E	5VDC	P	$\overline{Z}$ phase
F	N.C.	R	$\overline{B}$ phase
G	N.C.	S	N.C.
H	5VDC	T	Shield(F.G.)
J	N.C.	—	—

※N.C. : Not Connected.
※Terminals E and H, K and M are connected internally.
※Cable sold separately.

▣Dimensions

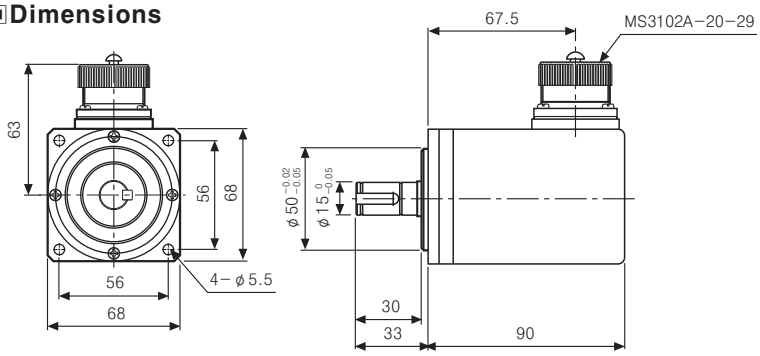

●Shaft dimension

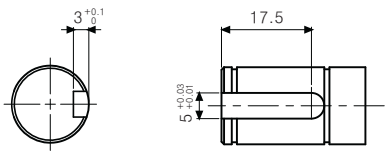

Unit:mm

Incremental rotary encoder(E60H Series)

▣Ordering information

E60H	20	–	8192	–	3	–	N	–	24	–	No mark

Series	Shaft diameter	Pulse/1Revolution	Output phase	Output	Power supply	Cable
Diameter ϕ60mm, hollow shaft type	ϕ20mm	100, 1024, 5000, 8192	3 : A, B, Z 6 : A, $\overline{A}$, B, $\overline{B}$, Z, $\overline{Z}$	T : Totem pole output N : NPN open collector output V : Voltage output L : Line driver output(※)	5 : 5VDC ±5% 24 : 12-24VDC ±5%	Blank:Normal type (※) C:Cable outgoing connector type

※Standard : E60H20-PULSE-3-N-24

※The power of Line driver is only for 5VDC

※Cable length :250mm

▣Specifications

Item			Diameter ϕ60mm hollow shaft type of incremental rotary encoder	
Model	Totem pole output		**E60H20 - □-3-T-5-□**	**E60H20 - □-3-T-24-□**
	NPN open collector output		**E60H20 - □-3-N-5-□**	**E60H20 - □-3-N-24-□**
	Voltage output		**E60H20 - □-3-V-5-□**	**E60H20 - □-3-V-24-□**
	Line driver output		**E60H20 - □-6-L-5-□**	———
Appearances & Dimensions			CE (Except for Line driver output) [ϕ60mm, L36mm]	
Resolution(P/R)			**(※1)** 100, 1024, 5000, 8192	
Electrical specification	Output phase		A, B, Z phase (Line driver output A, $\overline{A}$, B, $\overline{B}$, Z, $\overline{Z}$ phase)	
	Phase difference of output		Phase difference between A and B : $\frac{T}{4} \pm \frac{T}{8}$ (T=1cycle of A phase)	
	Control output	Totem pole output	• Low ☞ Load current:Max. 30mA, Residual voltage : Max. 0.4VDC • High ☞ Load current:Max. 10mA, Output voltage(Power supply 5VDC):Min. (Power supply-2.0)VDC, Output voltage(Power supply 12-24VDC):Min. (Power supply-3.0)VDC	
		NPN open collector output	Load current : Max. 30mA, Residual voltage : Max. 0.4VDC	
		Voltage output	Load current : Max. 10mA, Residual voltage : Max. 0.4VDC	
		Line driver output	• Low ☞ Load current : Max. 20mA, Residual voltage : Max. 0.5VDC • High ☞ Load current : Max. -20mA, Output voltage : Min. 2.5VDC	
	Response time (Rise/Fall)	Totem pole output	Max. 1㎲	• Measuring condition ☞ Cable length : 2m, I sink = Max. 20mA
		NPN open collector output	Max. 1㎲	
		Voltage output	Max. 1㎲	
		Line driver output	Max. 0.5㎲	
	Max. Response frequency		300kHz	
	Power supply		• 5VDC ±5%(Ripple P-P:Max. 5%) • 12-24VDC ±5%(Ripple P-P:Max. 5%)	
	Current consumption		Max. 80mA(disconnection of the load), Line driver output:Max. 50mA(disconnection of the load)	
	Insulation resistance		Min. 100MΩ(at 500VDC megger between all terminals and case)	
	Dielectric strength		750VAC 50/60Hz for 1 minute(Between all terminals and case)	
	Connection		Cable outgoing type, 250mm cable outgoing connector type	
Mechanical specification	Starting torque		Max. 150gf · cm(0.015N · m)	
	Rotor inertia		Max. 110g · cm² (11×10^{-5} kg · m²)	
	Shaft loading		Radial : 5kgf, Thrust : 2.5kgf	
	Max. allowable revolution		**(※2)** 6000rpm	
Vibration			1.5mm amplitude at frequency of 10 to 55Hz(for 1 min.) in each of X, Y, Z directions for 2 hours	
Shock			Max. 100G	
Ambient temperature			-10 to 70℃, Storage : -25 to 85℃(at non-freezing status)	
Ambient humidity			35 to 85%RH, Storage : 35 to 90%RH	
Protection			IP50(IEC standard)	
Cable			ϕ5mm, 5P, Length : 2m, Shield cable(Line driver output : ϕ5mm, 8P)	
Accessory			Bracket	
Unit weight			Approx. 300g	

(※1) Not indicated resolution is customizable.

(※2) Max. allowable revolution ≥ Max. response revolution 【Max. response revolution(rpm) = $\frac{\text{Max. response frequency}}{\text{Resolution}} \times 60$ sec.】

Make sure that max. response revolution should be lower than max. allowable revolution when selecting the resolution.

Incremental rotary encoder(E60H Series)

▣Connections

◎Normal type

●Totem pole output / NPN open collector output / Voltage output

●Line driver output

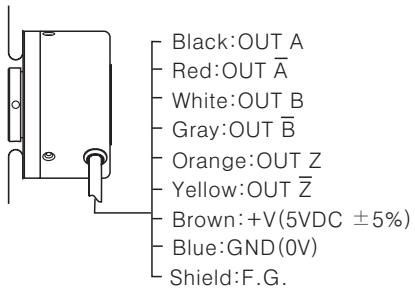

※Unused wires must be insulated.
※The metal and shield cable of encoder should be grounded(F.G.)

◎Cable outgoing connector type

●Totem pole output / NPN open collector output / Voltage output

●Line driver output

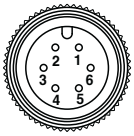

Totem pole output/ NPN open collector output/ Voltage output			Line driver output		
Pin No	Function	Cable color	Pin No	Function	Cable color
①	OUT A	Black	①	OUT A	Black
②	OUT B	White	②	OUT $\overline{A}$	Red
③	OUT Z	Orange	③	+V	Brown
④	+V	Brown	④	GND	Blue
⑤	GND	Blue	⑤	OUT B	White
⑥	F.G.	Shield	⑥	OUT $\overline{B}$	Gray
			⑦	OUT Z	Orange
			⑧	OUT $\overline{Z}$	Yellow
			⑨	F.G.	Shield

※F.G.(Field Ground) : It should be grounded separately.

▣Dimensions

◎Normal type

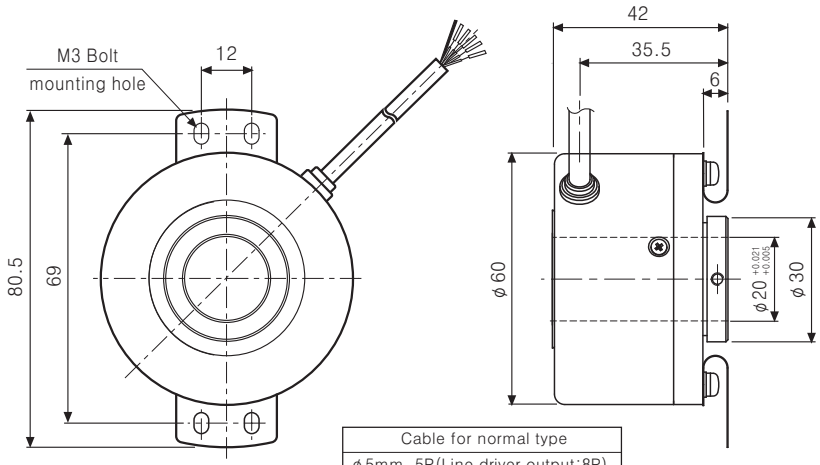

●Bracket

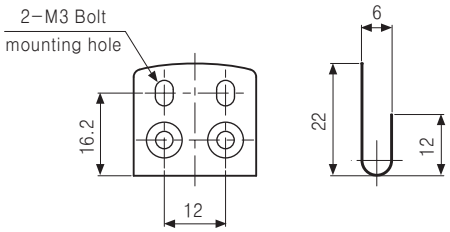

Cable for normal type
ϕ5mm, 5P(Line driver output:8P), Length:2000m, Shield cable

◎Cable outgoing connector type

●Connector cable(Accessory)

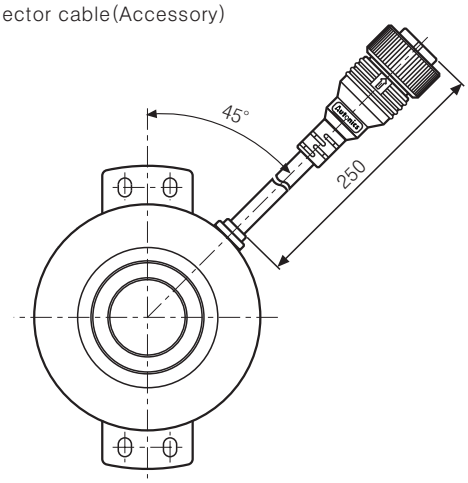

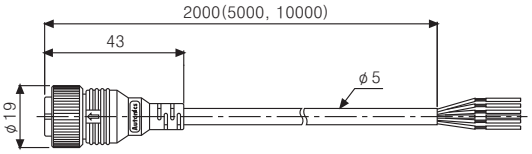

Connector cable model	
Line driver output	**CID9S-2(Standard), CID9S-5, CID9S-10**
Etc.	**CID6S-2(Standard), CID6S-5, CID6S-10**

Unit:mm

Incremental rotary encoder(E80H Series)

▣Ordering information

E80H	30	–	1024	–	3	–	N	–	24	–	No mark

Series	Shaft diameter	Pulse/1Revolution	Output phase	Output	Power supply	Cable
Diameter ϕ80mm, hollowshaft type	ϕ30mm ϕ32mm	60, 100, 360, 500, 512, 1024, 3200	3 : A, B, Z 6 : A, $\overline{A}$, B, $\overline{B}$, Z, $\overline{Z}$	T : Totem pole output N : NPN open collector output V : Voltage output L : Line driver output(※)	5 : 5VDC ±5% 24 : 12-24VDC ±5%	Blank:Normal type (※) C:Cable outgoing connector type

☞ Shaft inside diameter ϕ32mm is customizable.

※The power of Line driver is only for 5VDC

※Cable length :250mm

▣Specifications

Item				
Item			Diameter ϕ80mm hollow shaft type of incremental rotary encoder	
Model	Totem pole output		E80H30 - □-3-T-5-□	E80H30 - □-3-T-24-□
	NPN open collector output		E80H30 - □-3-N-5-□	E80H30 - □-3-N-24-□
	Voltage output		E80H30 - □-3-V-5-□	E80H30 - □-3-V-24-□
	Line driver output		E80H30 - □-6-L-5-□	————
Appearances & Dimensions			CE (Except for Line driver output) [ϕ80mm, L44.5mm]	
Resolution(P/R)			(※1) 60, 100, 360, 500, 512, 1024, 3200 (Not indicated resolution is customizable.)	
Electrical specification	Output phase		A, B, Z phase (Line driver output A, $\overline{A}$, B, $\overline{B}$, Z, $\overline{Z}$ phase)	
	Phase difference of output		Phase defference between A and B phase : $\frac{T}{4} \pm \frac{T}{8}$ (T=1cycle of A phase)	
	Control output	Totem pole output	• Low ☞ Load current:Max. 30mA, Residual voltage : Max. 0.4VDC • High ☞ Load current:Max. 10mA, Output voltage(Power supply 5VDC):Min. (Power supply-2.0)VDC, Output voltage(Power supply 12-24VDC):Min. (Power supply-3.0)VDC	
		NPN open collector output	Load current : Max. 30mA, Residual voltage : Max. 0.4VDC	
		Voltage output	Load current : Max. 10mA, Residual voltage : Max. 0.4VDC	
		Line driver output	Low ☞ Load current : Max. 20mA, Residual voltage : Max. 0.5VDC High ☞ Load current : Max. -20mA, Output voltage : Min. 2.5VDC	
	Response time (Rise/Fall)	Totem pole output	Max. 1㎲	• Measuring condition ☞ Cable length : 2m, I sink = Max. 20mA
		NPN open collector output	Max. 1㎲	
		Voltage output	Max. 1㎲	
		Line driver output	Max. 0.5㎲	
	Max. Response frequency		200kHz	
	Power supply		• 5VDC ±5% • 12-24VDC ±5%	
	Current consumption		Max. 80mA(disconnection of the load), Line driver output:Max. 50mA(disconnection of the load)	
	Insulation resistance		Min. 100MΩ(at 500VDC megger between all terminals and case)	
	Dielectric strength		750VAC 50/60Hz for 1 minute(Between all terminals and case)	
	Connection		Cable outgoing type, 250mm cable outgoing connector type	
Mechanical specification	Starting torque		Max. 200gf · cm(0.02N · m)	
	Rotor inertia		Max. 800g · cm² (8×10^{-5} kg · m²)	
	Shaft loading		Radial : 5kgf, Thrust : 2.5kgf	
	Max. allowable revolution		(※2) 3600rpm	
Vibration			1.5mm amplitude at frequency of 10 to 55Hz(for 1 min.) in each of X, Y, Z directions for 2 hours	
Shock			Max. 75G	
Ambient temperature			-10 to 70℃, Storage : -25 to 85℃(at non-freezing status)	
Ambient humidity			35 to 85%RH, Storage : 35 to 90%RH	
Protection			IP50(IEC standard)	
Cable			5P, ϕ5mm, Length : 2m, Shield cable(Line driver output : 8P, ϕ5mm)	
Accessory			Spring bracket	
Unit weight			Approx. 560g	

(※1)Not indicated resolution is customizable.

(※2)Max. allowable revolution ≥ Max. response revolution 【Max. response revolution(rpm) = $\frac{\text{Max. response frequency}}{\text{Resolution}} \times 60$ sec.】

Make sure that max. response revolution should be lower than max. allowable revolution when selecting the resolution.

Incremental rotary encoder(E80H Series)

▣Connections

◎Normal type

●Totem pole output / NPN open collector output / Voltage output

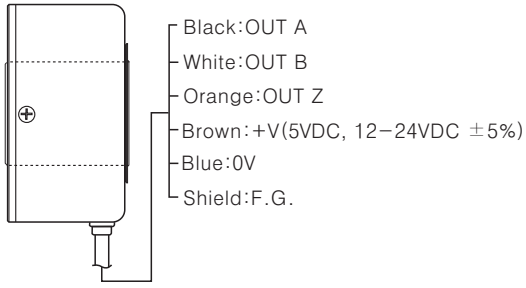

●Line driver output

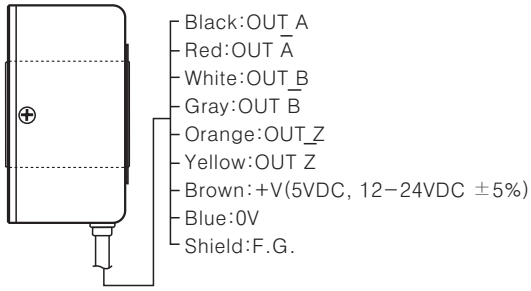

※Unused wires must be insulated.
※The metal and shield cable of encoder should be grounded(F.G.)

◎Cable outgoing connector type

●Totem pole output / NPN open collector output / Voltage output

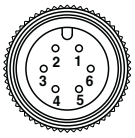

●Line driver output

Totem pole output/ NPN open collector output/ Voltage output			Line driver output		
Pin No	Function	Cable color	Pin No	Function	Cable color
①	OUT A	Black	①	OUT A	Black
②	OUT B	White	②	OUT $\overline{A}$	Red
③	OUT Z	Orange	③	+V	Brown
④	+V	Brown	④	GND	Blue
⑤	GND	Blue	⑤	OUT B	White
⑥	F.G.	Shield	⑥	OUT $\overline{B}$	Gray
			⑦	OUT Z	Orange
			⑧	OUT $\overline{Z}$	Yellow
			⑨	F.G.	Shield

※F.G.(Field Ground) : It should be grounded separately.

▣Dimensions

◎Normal type

●Inner diameter of shaft(Standard)

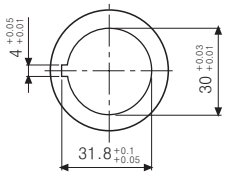

●Inner diameter of shaft (Customizable)

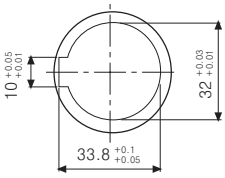

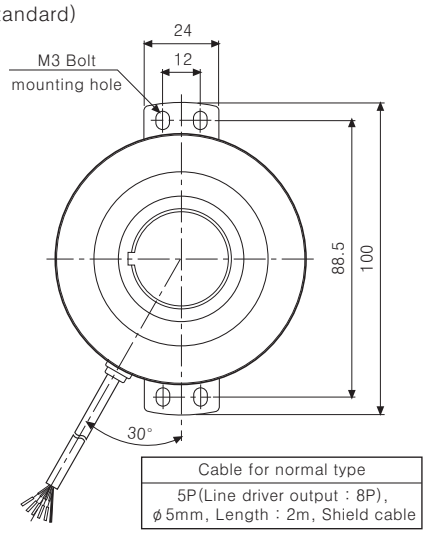

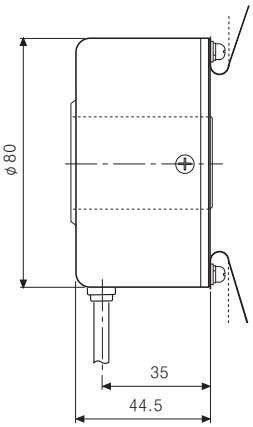

●Bracket

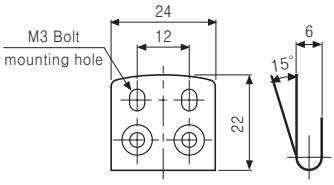

◎Cable outgoing connector type

●Connector cable(Accessory)

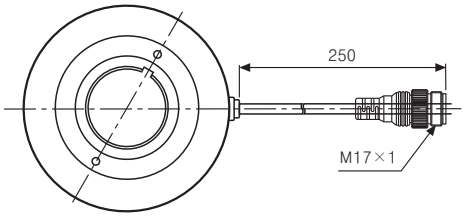

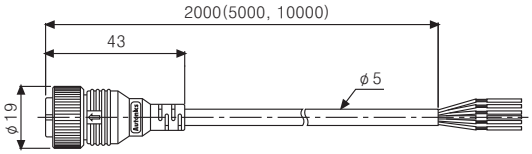

Connector cable model	
Line driver output	**CID9S-2(Standard), CID9S-5, CID9S-10**
Etc.	**CID6S-2(Standard), CID6S-5, CID6S-10**

Unit:mm

Incremental rotary encoder(E100H Series)

▣Ordering information

E100H	35	–	10000	–	6	–	N	–	5

Series	Shaft diameter	Pulse/1Revolution	Output phase	Output	Power supply
Diameter ϕ100mm hollow shaft type	ϕ35mm	512, 1024, 10000	3 : A, B, Z 6 : A, $\overline{A}$, B, $\overline{B}$, Z, $\overline{Z}$	T : Totem pole output N : NPN open collector output V : Voltage output L : Line driver output(※)	5 :5VDC ±5% 24:12-24VDC ±5%

※The power of Line driver is only for 5VDC

▣Specifications

Item			Diameter ϕ100mm hollow shaft type Incremental Rotary encoder	
Model	Totem pole output		E100H35 -□-3-T-5-□	E100H35 -□-3-T-24-□
	NPN open collector output		E100H35 -□-3-N-5-□	E100H35 -□-3-N-24-□
	Voltage output		E100H35 -□-3-V-5-□	E100H35 -□-3-V-24-□
	Line Driver output		E100H35 -□-6-L-5-□	——
Appearances & Dimensions			CE (Except Line driver output) [ϕ100mm, L69.5mm]	
Resolution(P/R)			(※1) 512, 1024, 10000 (Not indicated resolution is customizable.)	
Electrical specification	Output phase		A, B, Z phase (Line driver output A, $\overline{A}$, B, $\overline{B}$, Z, $\overline{Z}$ phase)	
	Phase difference of output		Phase difference between A and B phase : $\frac{T}{4} \pm \frac{T}{8}$ (T=1cycle of A phase)	
	Control output	Totem pole output	• Low ☞ Load current:Max. 30mA, Residual voltage : Max. 0.4VDC • High ☞ Load current:Max. 10mA, Output voltage(Power supply 5VDC):Min. (Power supply-2.0)VDC, Output voltage(Power supply 12-24VDC):Min. (Power supply-3.0)VDC	
		NPN open collector output	Load current : Max. 30mA, Residual voltage : Max. 0.4VDC	
		Voltage output	Load current : Max. 10mA, Residual voltage : Max. 0.4VDC	
		Line driver output	Low ☞ Load current : Max. 20mA, Residual voltage : Max. 0.5VDC High ☞ Load current : Max. -20mA, Output voltage : Min. 2.5VDC	
	Response time (Rise/Fall)	Totem pole output	Max. 1㎲	• Measuring condition ☞ Cable length : 2m, I sink = Max. 20mA
		NPN open collector output	Max. 1㎲	
		Voltage output	Max. 1㎲	
		Line driver output	Max. 0.5㎲	
	Max. Response frequency		300kHz	
	Power supply		• 5VDC ±5% • 12-24VDC ±5%	
	Current consumption		Max. 80mA(disconnection of the load), Line driver output:Max. 50mA(disconnection of the load)	
	Insulation resistance		Min. 100MΩ(at 500VDC megger between all terminals and case)	
	Dielectric strength		750VAC 50/60Hz for 1 minute(Between all terminals and case)	
	Connection		Cable outgoing type	
Mechanical specification	Starting torque		Max. 300gf · cm(0.03N · m)	
	Rotor inertia		Max. 800g · cm² (8×10^{-5} kg · m²)	
	Shaft loading		Radial : 5kgf, Thrust : 2.5kgf	
	Max. allowable revolution		(※2) 3600rpm	
Vibration			1.5mm amplitude at frequency of 10 to 55Hz(for 1 min.) in each of X, Y, Z directions for 2 hours	
Shock			Max. 75G	
Ambient temperature			-10 to 70℃, Storage:-25 to 85℃(at non-freezing status)	
Ambient humidity			35 to 85%RH, Storage:35 to 90%RH	
Protection			IP50(IEC standard)	
Cable			5P, ϕ5mm, Length:5m, Shield cable(Line driver output:8P, ϕ6mm, Length:5m)	
Accessory			Spring bracket 2EA	
Unit weight			Approx. 1200g	

(※1)Not indicated resolution is customizable.

(※2)Max. allowable revolution ≧ Max. response revolution 【Max. response revolution(rpm) = $\frac{\text{Max. response frequency}}{\text{Resolution}} \times 60$ sec.】

Make sure that max. response revolution should be lower than max. allowable revolution when selecting the resolution.

Incremental rotary encoder(E100H Series)

▣Connections

●Totem pole output / NPN open collector output / Voltage output

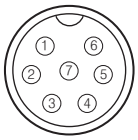

SCN-16-7P

Pin No.	Function	Cable color
①	+V	Brown
②	GND	Blue
③	OUT A	Black
④	OUT B	White
⑤	OUT Z	Orange
⑥	F.G.	Shield
⑦	N.C	N.C.

※Unused wires must be insulated.
※The metal and shield cable of encoder should be grounded(F.G.)

●Line driver output

SCN-20-10P

Pin No.	Function	Cable color
①	+V	Brown
②	GND	Blue
③	OUT A	Black
④	OUT $\overline{A}$	Red
⑤	F.G.	Shield
⑥	OUT B	White
⑦	OUT $\overline{B}$	Gray
⑧	OUT Z	Orange
⑨	OUT $\overline{Z}$	Yellow
⑩	N.C.	N.C.

※N.C.(Not Connected)

▣Dimensions

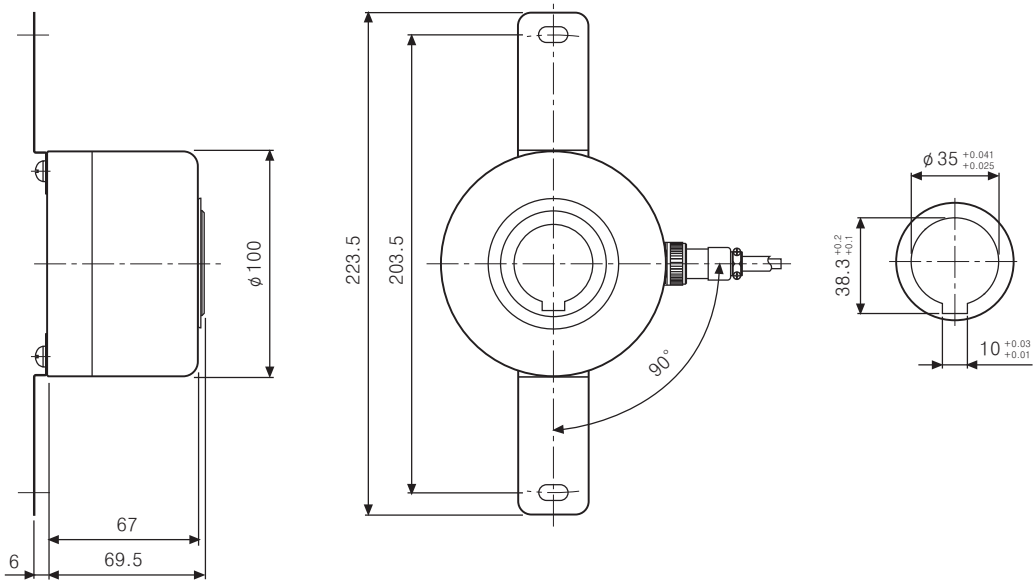

◎Connector cable

●Totem pole output / NPN open collector output / Voltage output

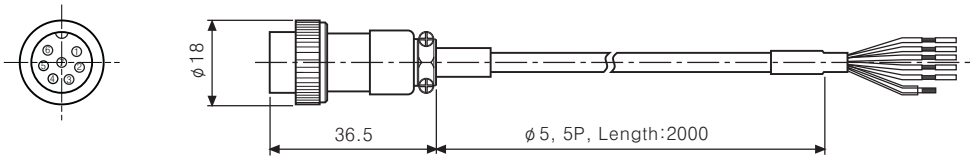

●Line driver output

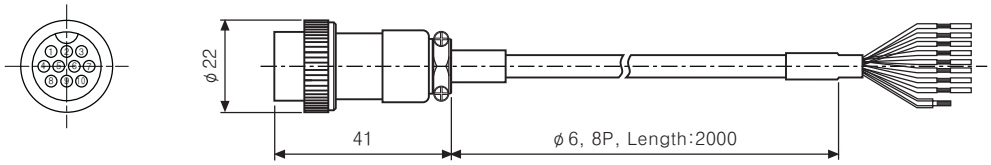

※10m connector cable is customizable.
※Cable outgoing type is customizable.

●Bracket

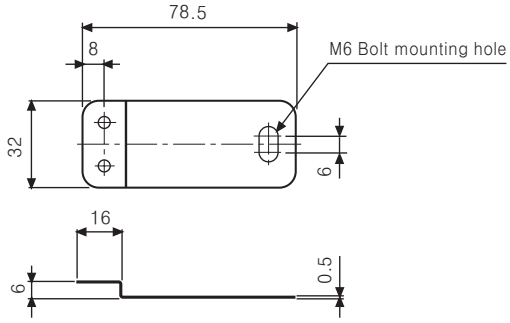

Unit:mm

Incremental rotary encoder(ENA Series)

▣Ordering information

ENA	—	5000	—	2	—	N	—	24

Series	Pulse/1Revolution	Output phase	Output	Power supply
Shaft type to be mounted at the side	Refer to resolution	2 : A, B 3 : A, B, Z	T : Totem pole output N : NPN open collector output V : Voltage output	5 : 5VDC ±5% 24 : 12-24VDC ±5%

※Standard : ENA-□-2-2-24 ※Standard : A, B

▣Specifications

Item			Side-mounting shaft type of incremental rotary encoder	
Model	Totem pole output		ENA-□-2-T-5	ENA-□-2-T-24
	NPN open collector output		ENA-□-2-N-5	ENA-□-2-N-24
	Voltage output		ENA-□-2-V-5	ENA-□-2-V-24
Appearances & Dimensions			CE [W70×H82×L101mm]	
Resolution(P/R)			(※1) *1, *2, *5, 10, *12, 15, 20, 23, 25, 30, 35, 40, 45, 50, 60, 75, 100, 120, 125, 150, 192, 200, 240, 250, 256, 300, 360, 400, 500, 512, 600, 800, 1000, 1024, 1200, 1500, 1800, 2000, 2048, 2500, 3000, 3600, 5000	
Electrical specification	Output phase		A, B phase (Option : A, B, Z phase)	
	Phase difference of output		Phase difference between A and B phase : $\frac{T}{4} \pm \frac{T}{8}$ (T=1cycle of A phase)	
	Control output	Totem pole output	• Low ☞ Load current:Max. 30mA, Residual voltage : Max. 0.4VDC • High ☞ Load current:Max. 10mA, Output voltage(Power supply 5VDC):Min. (Power supply-2.0)VDC, Output voltage(Power supply 12-24VDC):Min. (Power supply-3.0)VDC	
		NPN open collector output	Load current : Max. 30mA, Residual voltage : Max. 0.4VDC	
		Voltage output	Load current : Max. 10mA, Residual voltage : Max. 0.4VDC	
	Response time (Rise/Fall)	Totem pole output	Max. 1μs	• Measuring condition ☞ Cable length : 2m, I sink = Max. 20mA
		NPN open collector output	Max. 1μs	
		Voltage output	Max. 1μs	
	Max. Response frequency		300kHz	
	Power supply		5VDC ±5%(Ripple P-P:Max. 5%)	12-24VDC ±5%(Ripple P-P:Max. 5%)
	Current consumption		Max. 80mA(disconnection of the load)	
	Insulation resistance		Min. 100MΩ(at 500VDC megger between all terminals and case)	
	Dielectric strength		750VAC 50/60Hz for 1 minute(Between all terminals and case)	
	Connection		Connector type	
Mechanical specification	Starting torque		Max. 70gf · cm(0.007N · m)	
	Rotor inertia		Max. 80g · cm² (8×10^{-6} kg · m²)	
	Shaft loading		Radial : 10kgf, Thrust : 2.5kgf	
	Max. allowable revolution		(※2) 5000rpm	
Vibration			1.5mm amplitude at frequency of 10 to 55Hz(for 1 min.) in each of X, Y, Z directions for 2 hours	
Shock			Max. 75G	
Ambient temperature			-10 to 70℃, Storage:-25 to 85℃(at non-freezing status)	
Ambient humidity			35 to 85%RH, Storage: 35 to 90%RH	
Protection			IP50(IEC standard)	
Cable			5P, φ5mm, Length : 2m, Shield cable	
Accessory			φ10mm coupling	
Unit weight			Approx. 345g	

(※1)'*' pulse is only for A, B phase

(※2)Max. allowable revolution ≧ Max. response revolution 【Max. response revolution(rpm) $= \frac{\text{Max. response frequency}}{\text{Resolution}} \times 60$ sec.】

Make sure that max. response revolution should be lower than max. allowable revolution when selecting the resolution.

Incremental rotary encoder(ENA Series)

▣Connections

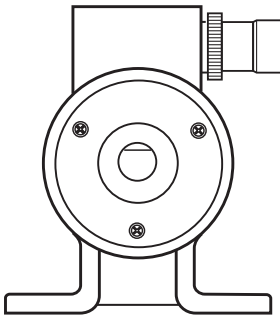

- (Black) : OUT A
- (White) : OUT B
- (Orange) : OUT Z
- (Brown) : +V(5VDC, 12−24VDC ±5V)
- (Blue) : GND(0V)
- Shield : F.G.

※Z phase output is customizable.
※Unused wires must be insulated.
※The metal and shield cable of encoder should be grounded(F.G.)

No.	Function	Color
①	A phase	Black
②	B phase	White
③	+V	Brown
④	0V	Blue

No.	Function	Color
①	A phase	Black
②	B phase	White
③	Z phase	Orange
④	+V	Brown
⑤	0V	Blue

▣Dimensions

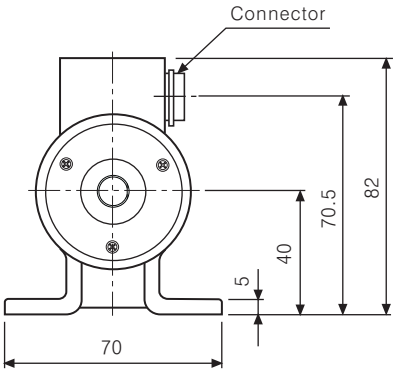

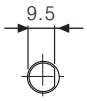

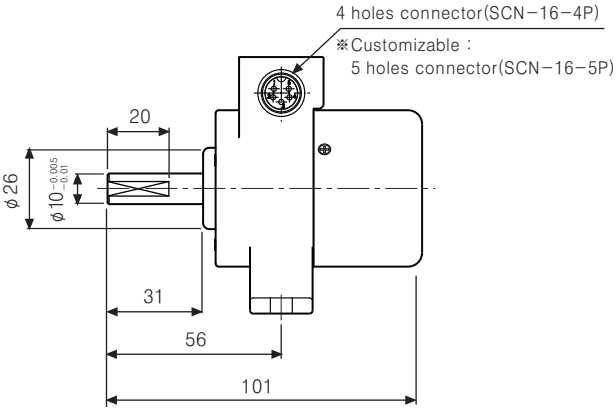

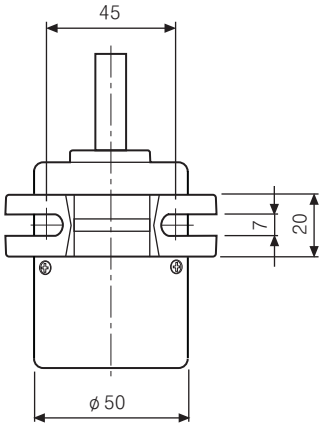

◎Connection cable

●ENA− ▭ − 2 − □ (Standard)

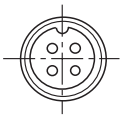

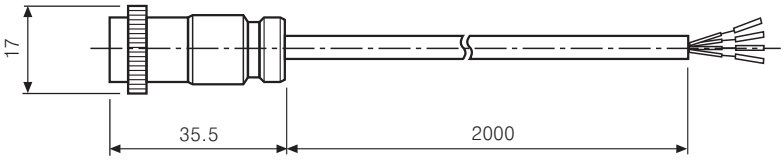

●ENA− ▭ − 3 − □ (Customizable)

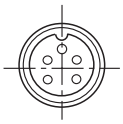

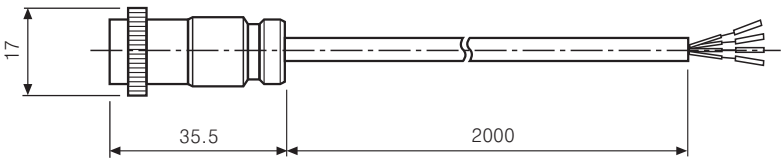

◎Coupling(ENA)

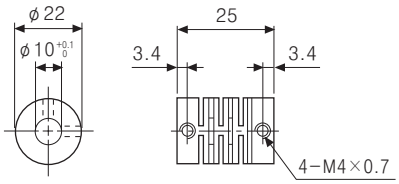

Unit:mm

Incremental rotary encoder(ENC Series)

▣Ordering information

ENC	–	1	–	1	–	N	–	24	–	No mark

Series	Output phase	Min. measuring unit	Output	Power supply	Cable
Wheel type	1 : A, B phase	1 : 1mm 2 : 1cm 3 : 1m 4 : 0.01yd 5 : 0.1yd 6 : 1yd	T : Totem pole output N : NPN open collector output V : Voltage output	5 : 5VDC ±5% 24 : 12−24VDC ±5%	No mark:Normal type (※) C:Cable outgoing connector type

※Cable length:250mm

▣Specifications

Item			Wheel type incremental rotary encoder	
Model	Totem pole output		ENC-1-□-T-5-□	ENC-1-□-T-24-□
	NPN open collector output		ENC-1-□-N-5-□	ENC-1-□-N-24-□
	Voltage output		ENC-1-□-V-5-□	ENC-1-□-V-24-□
Appearances			CE ●Pulses/Revolution	

NO	Min. measuring unit	Moving distance per 1 pulse	Gear ratio	Wheel circumference	Slit(P/R)
1	1mm	1mm/P	1 : 1	250mm	250Pulse
2	1cm	1cm/P	4 : 1	250mm	100Pulse
3	1m	1m/P	4 : 1	250mm	1Pulse
4	0.01yd	0.01yd/P	4 : 1	228.6mm(0.25/yd)	100Pulse
5	0.1yd	0.1yd/P	4 : 1	228.6mm(0.25/yd)	10Pulse
6	1yd	1yd/P	4 : 1	228.6mm(0.25/yd)	1Pulse

Item				
Resolution(P/R)			Refer to the table above	
Electrical specification	Output phase		A, B phase	
	Phase difference of output		Phase difference between A and B phase : $\frac{T}{4} \pm \frac{T}{8}$ (T=1cycle of A phase)	
	Control output	Totem pole output	• Low ☞ Load current : Max. 30mA, Residual voltage : Max. 0.4VDC • High ☞ Load current : Max. 10mA, Output voltage(Power supply 5VDC) : Min. (Power supply−2.0)VDC, Output voltage(Power supply 12−24VDC) : Min. (Power supply−3.0)VDC	
		NPN open collector output	Load current : Max. 30mA, Residual voltage : Max. 0.4VDC	
		Voltage output	Load current : Max. 10mA, Residual voltage : Max. 0.4VDC	
	Response time (Rise/Fall)	Totem pole output	Max. 1㎲	Cable length : 2m, I sink = Max. 20mA
		NPN open collector output	Max. 1㎲	
		Voltage output	Max. 1㎲	
	Max. Response frequency		180kHz	
	Power supply		5VDC ±5%(Ripple P−P:Max. 5%)	12−24VDC ±5%(Ripple P−P:Max. 5%)
	Current consumption		Max. 80mA(disconnection of the load)	
	Insulation resistance		Min. 100MΩ(at 500VDC megger between all terminals and case)	
	Dielectric strength		750VAC 50/60Hz for 1 minute(Between all terminals and case)	
	Connection		Cable outgoing type, 250mm cable outgoing connector type	
Mechanical specification	Starting torque		Depend on coefficient of friction	
	Max. allowable revolution		(※1) 5000rpm	
Vibration			1.5mm amplitude at frequency of 10 to 55Hz(for 1 min.) in each of X, Y, Z directions for 2 hours	
Shock			Max. 75G	
Ambient temperature			−10 to 70℃, Storage:−25 to 85℃(at non−freezing status)	
Ambient humidity			35 to 85%RH, Storage: 35 to 90%RH	
Cable			5P, ϕ5mm, Length:2m, Shield cable	
Protection			IP50(IEC standard)	
Unit weight			Approx. 494g	

(※1) Max. allowable revolution ≥ Max. response revolution 【Max. response revolution(rpm) = $\frac{\text{Max. response frequency}}{\text{Resolution}} \times 60$ sec.】

Make sure that max. response revolution should be lower than max. allowable revolution when selecting the resolution.

Incremental rotary encoder(ENC Series)

▣Connections

◎Normal ype

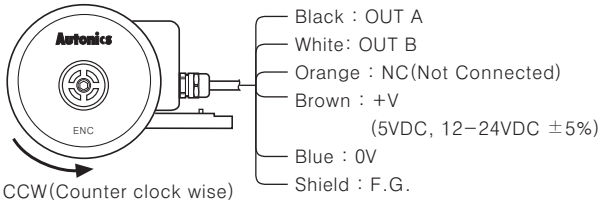

※Unused wires must be insulated.
※The metal and shield cable of encoder should be grounded(F.G.)

◎Cable outgoing connector type

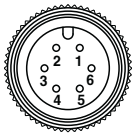

Pin No.	Function	Cable color
①	OUT A	Black
②	OUT B	White
③	NC	Orange
④	+V	Brown
⑤	GND	Blue
⑥	F.G.	Shield

※F.G.(Field Ground) : It should be grounded separately.

▣Dimensions

◎Normal type

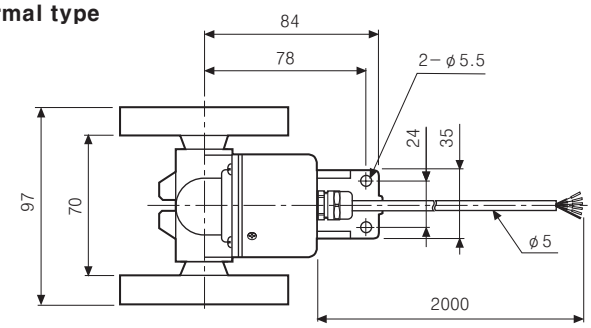

※The wheel circumference is changed according to model(φ), refer to resolution chart.

◎Cable outgoing connector type

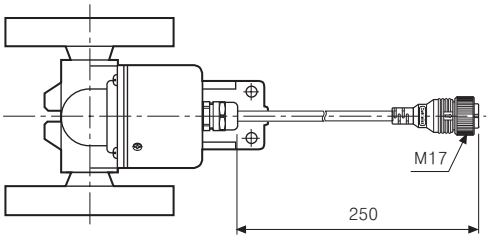

●Connector cable(Accessory)

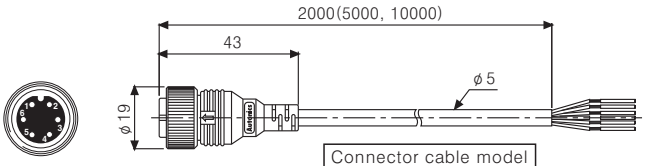

Connector cable model
CID6S-2(Standard), CID6S-5, CID6S-10

Unit:mm

Incremental rotary encoder(ENH/ENHP Series)

▣Ordering information

ENH	—	100	—	1	—	T	—	24

Series	Pulse/1Revolution	Clickstopper position	Output	Power supply
Handle type	25 100	1 : Normal "H" 2 : Normal "L"	T : Totem pole output V : Voltage output L : Line driver output(※)	5 : 5VDC ±5% 24 : 12−24VDC ±5%

ENHP	—	100	—	1	—	L	—	5

Series	Pulse/1Revolution	Clickstopper position	Control output	Power supply
Portable encoder with handle	100	1 : Normal "H" 2 : Normal "L"	T : Totem pole output L : Line driver output	5 : 5VDC ±5% 24 : 12−24VDC ±5%

※The power of Line driver is only for 5VDC

▣Specifications

Item			Handle type of incremental rotary encoder			
Model	Totem pole output		ENH-□-1-T-□	ENH-□-2-T-□	ENHP-100-1-T-□	ENHP-100-2-T-□
	Voltage output		ENH-□-1-V-□	ENH-□-2-V-□	———	———
	Line driver output		ENH-□-1-L-5	ENH-□-2-L-5	ENHP-100-1-L-5	ENHP-100-2-L-5
Appearances & Dimensions			[ø80mm, L67.2mm]		NEW	
Resolution(P/R)			25, 100 (Not indicated resolution is customizable.)		100	
Electrical specification	Output phase		A, B phase (Line driver output A, $\overline{A}$, B, $\overline{B}$ phase)			
	Phase difference of output		Phase difference between A and B phase : $\frac{T}{4} \pm \frac{T}{8}$ (T=1cycle of A phase)			
	Control output	Totem pole output	• Low ☞ Load current : Max. 30mA, Residual voltage : Max. 0.4VDC • High ☞ Load current : Max. 10mA, Output voltage(Power supply 5VDC) : Min. (Power supply−2.0)VDC, Output voltage(Power supply 12−24VDC) : Min. (Power supply−3.0)VDC			
		Voltage output	Load current : Max. 10mA, Residual voltage : Max. 0.4VDC			
		Line driver output	• Low ☞ Load current : Max. 20mA, Residual voltage : Max. 0.5V • High ☞ Load current : Max. −20mA, Output voltage : Min. 2.5V			
	Response time (Rise/Fall)	Totem pole output	Max. 1㎲			• Measuring condition ☞ I sink = Max. 20mA
		Voltage output	Max. 1㎲(Only for ENH series)			
		Line driver output	• ENH series ☞ Max. 0.2㎲ • ENHP series ☞ Max. 0.5㎲			
	Power supply	Totem pole output	• 5VDC ±5%(Ripple P−P : Max. 5%) • 12−24VDC ±5%(Ripple P−P : Max. 5%)			
		Voltage output				
		Line driver output	5VDC ±5%(Ripple P−P : Max. 5%)			
	Current consumption		Max. 40mA(disconnection of the load), Line driver output:Max. 50mA(disconnection of the load)			
	Max. Response frequency		10kHz			
	Insulation resistance		Min. 100MΩ(at 500VDC megger between all terminals and case)			
	Dielectric strength		750VAC 50/60Hz for 1 minute(Between all terminals and case)			
	Connection		Terminal block type		25Pin D−SUB of connector type	
Mechanical specification	Starting torque		Max. 1kgf · cm(0.098N · m)			
	Shaft loading		Radial : 2kgf, Thrust : 1kgf			
	Max. allowable revolution		(※1) Max. 200rpm(Normal), 600rpm(Peak)			
Vibration			1.5mm amplitude at frequency of 10 to 55Hz(for 1 min.) in each of X, Y, Z directions for 2 hours			
Shock			Max. 50G			
Ambient temperature			−10 to 70℃, Storage:−25 to 85℃(at non−freezing status)			
Ambient humidity			35 to 85%RH, Storage: 35 to 90%RH			
Unit weight			Approx. 300g		Approx. 730g	

(※1)Max. allowable revolution ≧ Max. response revolution 【Max. response revolution(rpm) = $\frac{\text{Max. response frequency}}{\text{Resolution}} \times 60$ sec.】

Make sure that max. response revolution should be lower than max. allowable revolution when selecting the resolution.

Incremental rotary encoder(ENH/ENHP Series)

▣Connections

◎ENH Series

●Totem pole output / Voltage output

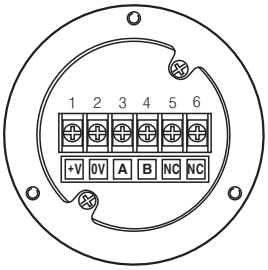

●Line driver output

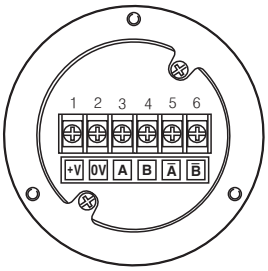

※Do not use terminals 5 and 6.

◎ENHP Series

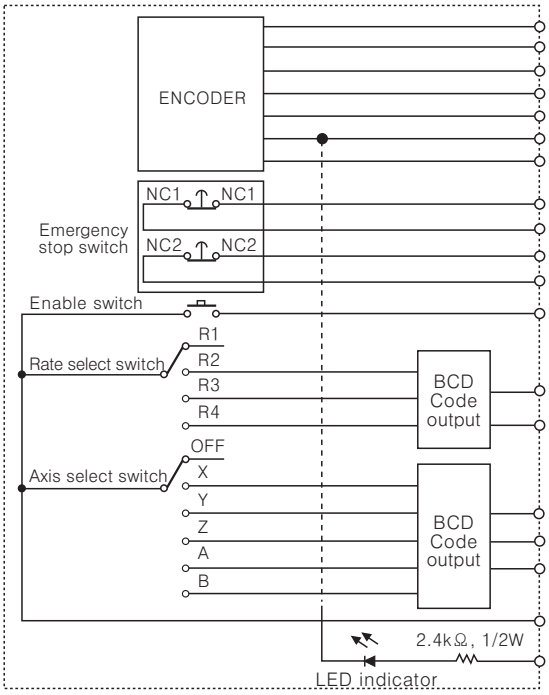

COLOR	SIGNAL	24P CONNECTOR (PIN NO.)
SHILED	F. G	
YELLOW	OUT A	1
LT.VIOLET	OUT $\overline{A}$ ※1	2
WHITE	OUT B	3
CLEAR	OUT $\overline{B}$ ※1	4
BLACK	0V	5
RED	+V	6
GREEN	E-STOP1	8
LT.GREEN	E-STOP1	9
PINK	E-STOP2	22
GRASS GREEN	E-STOP2	24
VIOLET	ENABLE	10
BROWN	FEED RATE	11
LT.BROWN	SELECT	12
ORANGE	AXIS SELECT	13
LT. BULE		14
BLUE		15
LT.YELLOW	BCD COMMON	16
GRAY	LED(+)	18

● **AXIS SELECT**

Axis	BCD Code output		
	Pin No.15	Pin No.14	Pin No.13
OFF	0	0	0
X axis	0	0	1
Y axis	0	1	0
Z axis	0	1	1
A axis	1	0	0
B axis	1	0	1

● **RATE SELECT**

RTAE	BCD Code output	
	Pin No.12	Pin No.11
R1	0	0
R2	0	1
R3	1	0
R4	1	1

※1. Totem pole output does not have $\overline{A}$, $\overline{B}$ output signal.
※COMMON termnal(Pin NO.16) of Axis select switch and Rate select switch is common.

▣Dimensions

◎ENH Series

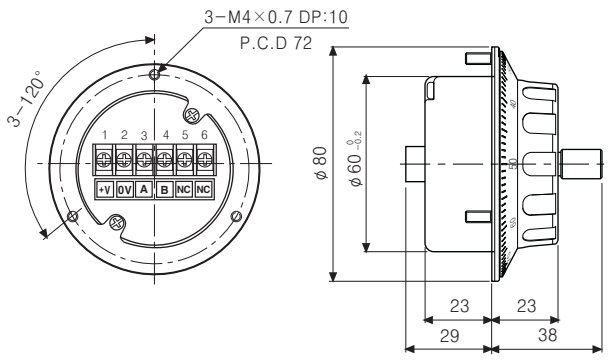

※ ø70mm PCD mounting hole type is customizable.

◎ENHP Series

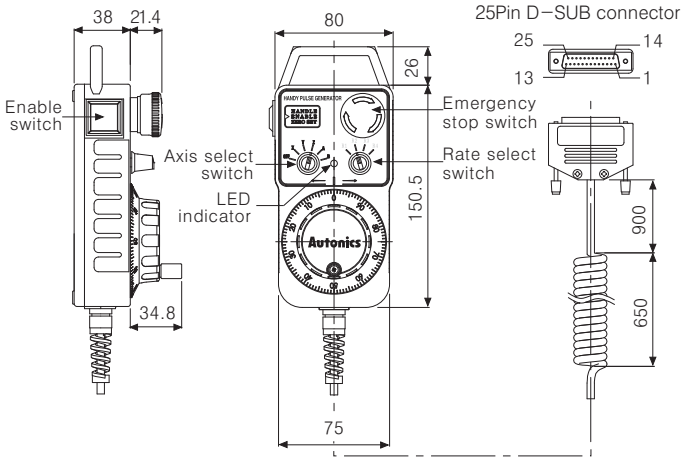

Unit:mm

Absolute rotary encoder(EP50S Series)

▣Ordering information

EP50S	–	8	–	1024	–	1	–	R	–	P	–	24

Series	Shaft diameter	Pulse/1Revolution	Output code	Rotating direction	Control output	Power supply
Diameter ϕ50mm shaft type	ϕ8mm	Refer to resolution	1 : BCD Code 2 : Binary Code 3 : Gray Code	F : Output value increase at CW direction R : Output value increase at CCW direction	P : PNP open collector output N : NPN open collector output	5 : 5VDC ±5% 24 : 12-24VDC ±5%

※Gray code is customizable.

▣Specifications

Item			Diameter ϕ50mm shaft type of absolute rotary encoder
Model	PNP open collector output		**EP50S8 - □ - □ - P - □**
	NPN open collector output		**EP50S8 - □ - □ - N - □**
Appearances & Dimensions			CE [ϕ50mm, L91.5mm]
Resolution			6, 8, 12, 16, 24, 32, 40, 45, 64, 90, 128, 180, 256, 360, 512, 720, 1024
Electrical specification	Output code/Output angle		Refer to "Output waveform"
	Control output	PNP open collector output	Output voltage : Min. (Power supply-1.5)VDC, Load current : Max. 32mA
		NPN open collector output	Load current : Max. 32mA, Residual voltage : Max. 1VDC
	Response time(Rise/Fall)		Ton=800nsec, Toff=Max. 800nsec(Cable length:2m, I sink=32mA)
	Max. Response frequency		35kHz
	Power supply		• 5VDC ±5%(Ripple P-P : Max. 5%) • 12-24VDC ±5%(Ripple P-P : Max. 5%)
	Current consumption		Max. 100mA(disconnection of the load)
	Insulation resistance		Min. 100MΩ(at 500VDC megger between all terminals and case)
	Dielectric strength		750VAC 50/60Hz for 1 minute(Between all terminals and case)
	Connection		Cable outgoing type
Mechanical specification	Starting torque		Max. 40gf · cm(0.004N · m)
	Rotor inertia		Max. 40g · cm² (4×10^{-6} kg · m²)
	Shaft loading		Radial : 10kgf, Thrust : 2.5kgf
	Max. allowable revolution		**(※1)** 3000rpm
Vibration			1.5mm amplitude at frequency of 10 to 55Hz(for 1 min.) in each of X, Y, Z directions for 2 hours
Shock			Max. 50G
Ambient temperature			-10 to 70℃, Storage:-25 to 85℃(at non-freezing status)
Ambient humidity			35 to 85%RH, Storage: 35 to 90%RH
Protection			IP64(IEC standard)
Cable			15P, ϕ7mm, Length : 2m, Shield cable
Accessory			Mounting bracket, Coupling
Unit weight			Approx. 380g

(※1) Max. allowable revolution ≥ Max. response revolution 【Max. response revolution(rpm) = $\frac{\text{Max. response frequency}}{\text{Resolution}}$ ×60 sec.】

Make sure that max. response revolution should be lower than max. allowable revolution when selecting the resolution.

Absolute rotary encoder(EP50S Series)

▣Connections

●BCD Code

	Resolution / Color	6 division	8 division	10 division	12 division	16 division	20 division	24 division	32 division	40 division	45 division	48 division	64 division	90 division	128 division	180 division	256 division	360 division	512 division	720 division	1024 division
Power	White	+V																			
Power	Boack	0V																			
Outpur wire	Brown	2^0																			
Outpur wire	Red	2^1																			
Outpur wire	Orange	2^2																			
Outpur wire	Yellow	N.C.	2^3																		
Outpur wire	Blue	N.C.	$2^0\times10$																		
Outpur wire	Purple	N.C.					$2^1\times10$														
Outpur wire	Gray	N.C.									$2^2\times10$										
Outpur wire	White/Brown	TP1									N.C.		$2^3\times10$								
Outpur wire	White/Red	TP2									N.C.			$2^0\times100$							
Outpur wire	White/Orange	EP									N.C.						$2^1\times100$				
Outpur wire	White/Yellow	N.C.																	$2^2\times100$		
Outpur wire	White/Blue	N.C.																		$2^3\times100$	
Outpur wire	White/Purple	N.C.																		$2^0\times1000$	
Outpur wire	Shield wire	F.G.																			

●Binary code/Gray code

	Resolution / Color	6 division	8 division	10 division	12 division	16 division	20 division	24 division	32 division	40 division	45 division	48 division	64 division	90 division	128 division	180 division	256 division	360 division	512 division	720 division	1024 division
Power	White	+V																			
Power	Black	0V																			
Outpur wire	Brown	2^0																			
Outpur wire	Red	2^1																			
Outpur wire	Orange	2^2																			
Outpur wire	Yellow	N.C.	2^3																		
Outpur wire	Blue	N.C.					2^4														
Outpur wire	Purple	N.C.								2^5											
Outpur wire	Gray	N.C.												2^6							
Outpur wire	White/Brown	TP1									N.C.					2^7					
Outpur wire	White/Red	TP2									N.C.							2^8			
Outpur wire	White/Orange	EP									N.C.									2^9	
Outpur wire	Shield wire	F.G.																			

※Unused wires must be insulated.
※Encoder case and shield wire must be grounded(F.G.).
※N.C.: Not Connected.
※Output cable must not be short-circuited, because Driver IC is used in output circuit.

▣Dimensions

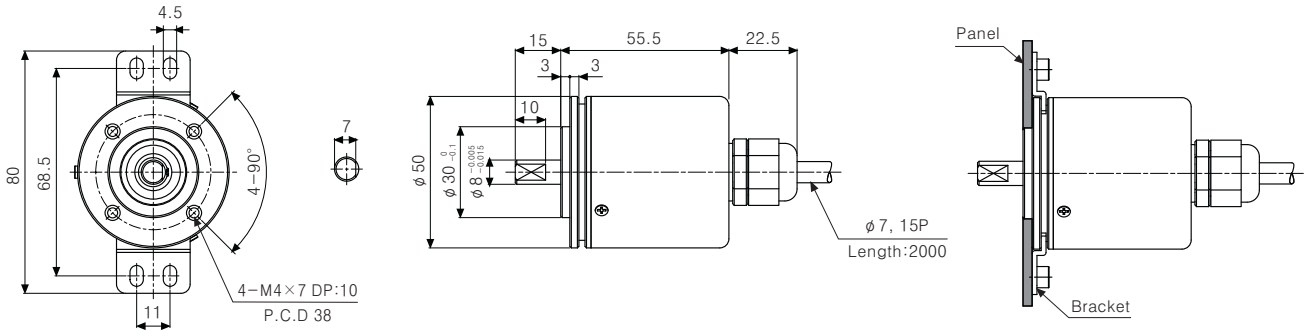

●Bracket

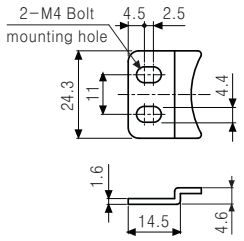

●Coupling(EP50S)

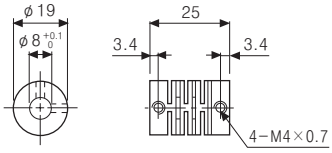

Unit:mm

Absolute rotary encoder(EP58 Series)

▣Ordering information

EP58SC	10	1024	1	R	P	24
Series Diameter ϕ58mm	Shaft diameter	Resolution/ 1revolution	Output code	Rotating direction	Control output	Power supply
SC:Shaft Clamping	10 ϕ10mm	Refer to resolution	1:BCD Code 2:Binary Code 3:Gray Code	F:Output value increases at CW direction R:Output value increases at CCW direction ※Shaft based	P:PNP open collector output N:NPN open collector output	5:5VDC±5% 24:12-24VDC ±5%
SS:Shaft Synchro	6 ϕ6mm					
HB:Hollow built-in	8 ϕ8mm					

※Gray code is optional.

▣Specifications

Item		Diameter ϕ58mm shaft type/hollow built-in type of absolute rotary encoder							
Model	PNP open collector output	**EP58□□-□□□□-□□-P-□**							
	NPN open collector output	**EP58□□-□□□□-□□-N-□**							
Appearances & Dimensions		CE **Shaft Clamping type** [ϕ58mm, L84.5mm] **Shaft Synchro type** [ϕ58mm, L68.5mm] **Hollow built-in type** [ϕ58mm, L60.5mm]							
Resolution		720, 360, 180, 90, 45 division				1024, 512, 256, 128, 64 division			
Electrical specification	Output code		BCD Code	Binary Code	Gray Code		BCD Code	Binary Code	Gray Code
	Output phase/Output angle	720 division	TS:Signal Pulse (11bit) TS:0.5° ±25'	TS:Signal Pulse (10bit) TS:0.5° ±25'	TS:Signal Pulse (10bit) TS:1° ±25'	1024 division	TS:Signal Pulse (13bit) TS:0.3515° ±15'	TS:Signal Pulse (10bit) TS:0.3515° ±15'	TS:Signal Pulse (10bit) TS:0.703° ±15'
		360 division	TS:Signal Pulse (10bit) TS:1° ±25'	TS:Signal Pulse (9bit) TS:1° ±25'	TS:Signal Pulse (9bit) TS:2° ±25'	512 division	TS:Signal Pulse (11bit) TS:0.703° ±15'	TS:Signal Pulse (9bit) TS:0.703° ±15'	TS:Signal Pulse (9bit) TS:1.406° ±15'
		180 division	TS:Signal Pulse (9bit) TS:2° ±25'	TS:Signal Pulse (8bit) TS:2° ±25'	TS:Signal Pulse (8bit) TS:4° ±25'	256 division	TS:Signal Pulse (10bit) TS:1.406° ±15'	TS:Signal Pulse (8bit) TS:1.406° ±15'	TS:Signal Pulse (8bit) TS:2.8125° ±15'
		90 division	TS:Signal Pulse (8bit) TS:4° ±25'	TS:Signal Pulse (7bit) TS:4° ±25'	TS:Signal Pulse (7bit) TS:8° ±25'	128 division	TS : Signal Pulse (9bit) TS : 2.8125° ±15'	TS:Signal Pulse (7bit) TS:2.8125° ±15'	TS:Signal Pulse (7bit) TS:5.625° ±15'
		45 division	TS:Signal Pulse (7bit) TS:8° ±25'	TS:Signal Pulse (6bit) TS:8° ±25'	TS:Signal Pulse (6bit) TS:16° ±25'	64 division	TS : Signal Pulse (7bit) TS : 5.625° ±15'	TS:Signal Pulse (6bit) TS:5.625° ±15'	TS:Signal Pulse (6bit) TS:11.25° ±15'
	Control output: PNP open collector output	Output voltage : Min.(Power supply-1.5VDC), Load current : Max. 32mA							
	Control output: NPN open collector output	Load current : Max. 32mA, Residual voltage : Max. 1VDC							
	Response time (Rising time, Falling time)	Ton=800nsec, Toff=Max. 800nsec(Cable : 2m, I sink = 32mA)							
	Max. Response frequency	35kHz							
	Power supply	• 5VDC ±5%(Ripple P-P : Max. 5%) • 12-24VDC ±5%(Ripple P-P : Max. 5%)							
	Current consumption	Max. 100mA(disconnection of the load)							
	Insulation resistance	Min. 100MΩ(at 500VDC megger between all terminals and case)							
	Dielectric strength	750VAC 50/60Hz for 1 minute(Between all terminals and case)							
	Connection	Cable outgoing type(Cable gland)							
Mechanical specification	Starting torque	• SC/SS type : Max. 40gf · cm(0.004N · m) • HB type : Max. 90gf · cm(0.009N · m)							
	Moment of inertia	• SC/SS type : Max. 15g · cm² (1.5×10^{-6} kg · m²) • HB type : Max. 20g · cm² (2.0×10^{-6} kg · m²)							
	Shaft loading	• SC/SS type : Radial : 10kg · f, Thrust : 2.5kg · f • HB type : Radial : 2kg · f, Thrust : 1kg · f							
	Max. allowable revolution	3000rpm							
Vibration		1.5mm amplitude at frequency of 10 to 55Hz(for one minute cycle) in each of X, Y, Z direction for 2 hours							
Shock		**(※1)** Max. 50G							
Ambient temperature		-10 to 70℃, Storage:-25 to 85℃(at non-freezing status)							
Ambient humidity		35 to 85%RH, Storage:35 to 90%RH							
Protection		IP50(IEC standard)							
Cable		ϕ7mm, 15P, Length:2m, Shield cable							
Accessories		ϕ10mm(SC type)/ϕ6mm(SS type) coupling, Fixing bracket							
Unit weight		• Clamping : Approx. 435g • Synchro : Approx. 415g • Built-IN : Approx. 410g							

(※1) Max. allowable revolution ≧ Max. response revolution 【Max. response revolution(rpm) $= \frac{\text{Max. response frequency}}{\text{Resolution}} \times 60$ sec.】

Make sure that max. response revolution should be lower than max. allowable revolution when selecting the resolution.

Absolute rotary encoder(EP58 Series)

▣Connections

●BCD code

Color \ Resolution		45 division	64 division	90 division	128 division	180 division	256 division	360 division	512 division	720 division	1024 division
Power	White	+V									
	Black	GND(0V)									
Output wire	Brown	2^0									
	Red	2^1									
	Orange	2^2									
	Yellow	2^3									
	Blue	(2^0×10)									
	Purple	(2^1×10)									
	Gray	(2^2×10)									
	White/Brown	N.C.		(2^3×10)							
	White/Red	N.C.			(2^0×100)						
	White/Orange	N.C.					(2^1×100)				
	White/Yellow	N.C.							(2^2×100)		
	White/Blue	N.C.									(2^3×100)
	White/Purple	N.C.									(2^0×1000)
	Shield wire	F.G.									

●Binary code / Gray code

Color \ Resolution		45 division	64 division	90 division	128 division	180 division	256 division	360 division	512 division	720 division	1024 division
Power	White	+V									
	Black	GND(0V)									
Output wire	Brown	2^0									
	Red	2^1									
	Orange	2^2									
	Yellow	2^3									
	Blue	2^4									
	Purple	2^5									
	Gray	N.C.		2^6							
	White/Brown	N.C.				2^7					
	White/Red	N.C.						2^8			
	White/Orange	N.C.								2^9	
	White/Yellow	N.C.									
	White/Blue	N.C.									
	White/Purple	N.C.									
	Shield wire	F.G.									

※Unused wires must be insulated.
※Encoder case and shield wire must be grounded(F.G.).
※N.C.: Not Connected.
※Output cable must not be short-circuited, because Driver IC is used in output circuit.

▣Dimensions

◎**Shaft clamping type**

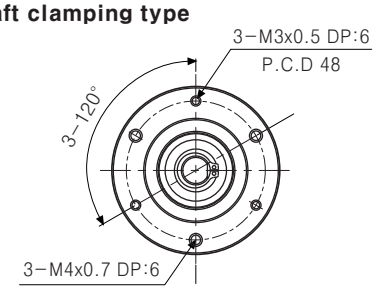

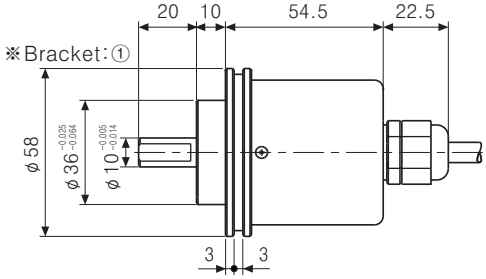

◎**Shaft synchro type**

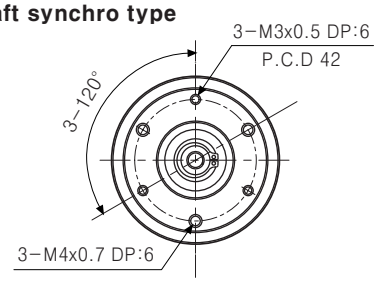

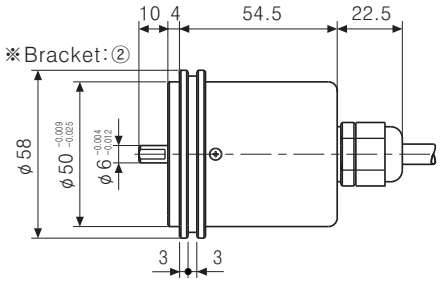

Unit:mm

Absolute rotary encoder(EP58 Series)

▣Dimensions

◎Hollow built-in type

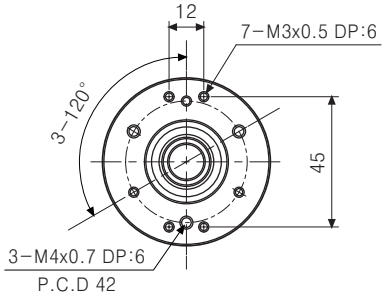

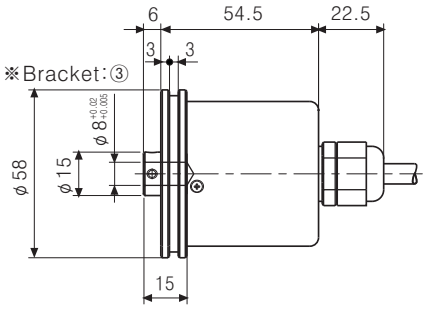

●Bracket

※SC type:①

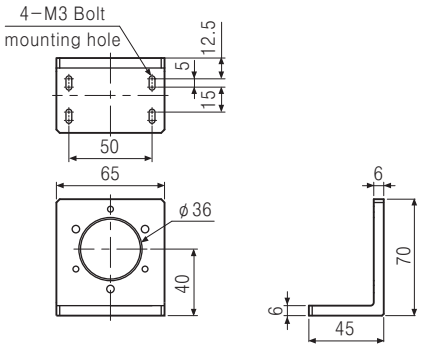

※SS type:②

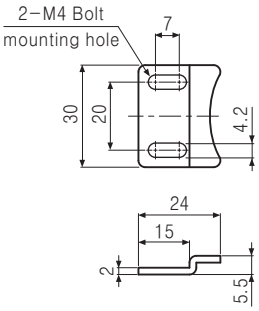

※HB/H type:③

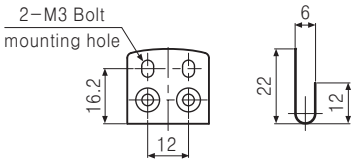

● ϕ10 Coupling(EP58SC10)

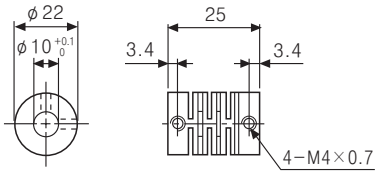

● ϕ8 Coupling(EP58SS6)

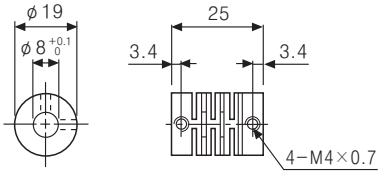

Absolute rotary encoder(ENP Series)

▣Ordering information

ENP – 1 – 1 – 1 – R – 360 – N

Series	Output code	Output	Power supply	Revolution direction	Resolution/1Pulse	Control output
Diameter ϕ60mm shaft type	1 : BCD code	0 : Negative logic 1 : Positive logic	0 : 5–12VDC ±5% 1 : 12–24VDC ±5%	F : Output value increase at CW direction R : Output value increase at CCW direction	006 : 6 division 016 : 16 division 008 : 8 division 024 : 24 division 012 : 12 division 360 : 360 division	P : PNP open collector output N : NPN open collector output

※Since the output type is related with control output, please select the model name in specification when ordering the item.
※PNP output is not available in negative logic.

▣Specifications

Item		Diameter ϕ60mm shaft type of absolute rotary encoder					
Model	PNP open collector output	ENP-111□-006-P	ENP-111□-008-P	ENP-111□-012-P	ENP-111□-016-P	ENP-111□-024-P	ENP-110□-360-P
	NPN open collector output	ENP-101□-006-N	ENP-101□-008-N	ENP-101□-012-N	ENP-101□-016-N	ENP-101□-024-N	ENP-100□-360-N
Appearances & Dimensions		[ϕ60mm, L117.5mm]					
Resolution		6 division	8 division	12 division	16 division	24 division	360 division
Electrical specification	Output phase	TP(Timing Pulse) : 2bit TS(Signal Pulse) : 4bit(BCD, EP)	TP(Timing Pulse) : 2bit TS(Signal Pulse) : 5bit(BCD, EP)	TP(Timing Pulse) : 2bit TS(Signal Pulse) : 6bit(BCD, EP)	TP(Timing Pulse) : 2bit TS(Signal Pulse) : 6bit(BCD, EP)	TP(Timing Pulse) : 2bit TS(Signal Pulse) : 7bit(BCD, EP)	TS(Signal Pulse) : 10bit(BCD)
	Output of phase differencs	TP1:53° ±30' TP2:15° ±30' P:60° ±30' TS:56° ±30'	TP1:39° ±30' TP2:15° ±30' P:45° ±30' TS:42° ±30'	TP1:3° ±30' TP2:15° ±30' P:30° ±30' TS:26° ±30'	TP1:2° ±30' TP2:11.25° ±30' P:22.5° ±30' TS:19.5° ±30'	TP1:8° ±30' TP2:3° ±30' P:15° ±30' TS:11° ±30'	TS:1° ±30'
	Control output – PNP open collector output	Output voltage : Min. (Power supply–1.5)VDC, Load current : Max. 32mA					
	Control output – NPN open collector output	Load current : Max. 32mA, Residual voltage : Max. 1VDC					
	Response time (Rise & Fall) – PNP open collector output	TON=500ns, TOFF=Max. 2.5μs (Cable length:1m, I sink =32mA)					
	Response time (Rise & Fall) – NPN open collector output	TON=400ns, TOFF=Max. 1.5μs (Cable length:1m, I sink =32mA)					
	Max. Response frequency	20kHz					
	Power supply	12–24VDC ±5%(Ripple P–P:Max. 5%)					5–12VDC ±5%(Ripple P–P:Max. 5%)
	Current consumption	Max. 150mA(disconnection of the load)				Max. 200mA (disconnection of the load)	
	Insulation resistance	Min. 20MΩ(at 500VDC megger between all terminals and case)					
	Dielectric strength	500VAC 50/60Hz for 1 minute(Between all terminals and case)					
	Connection	Cable outgoing connection					
Mechanical specification	Starting torque	Max. 500gf · cm(0.05N · m)					
	Rotor inertia	Max. 300g · cm² (3×10⁻⁵kg · m²)					
	Shaft loading	Radial : 10kgf, Thrust : 2.5kgf					
	Mechanical revolution	(※1) 3600rpm					
Vibration		1.5mm amplitude at frequency of 10 to 55Hz(for 1 min.) in each of X, Y, Z directions for 2 hours					
Shock		Max. 75G					
Ambient temperature		–10 to 60℃, Storage :–25 to 85℃(at non–freezing status)					
Ambient humidity		35 to 85%RH, Storage : 35 to 90%RH					
Protection		IP50(IEC standard)					
Cable		12P, ϕ8mm, Length : 1m, Double shield cable					
Accessory		Mounting bracket, Coupling					
Unit weight		Approx. 577g					Approx. 690g

(※1)Max. allowable revolution ≧ Max. response revolution 【Max. response revolution(rpm) = $\frac{\text{Max. response frequency}}{\text{Resolution}}$ ×60 sec.】

Make sure that max. response revolution should be lower than max. allowable revolution when selecting the resolution.

Absolute rotary encoder(ENP Series)

▣Connections

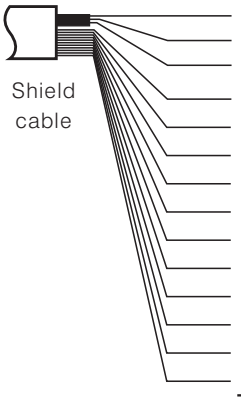

Cable color		6 division	8 division	12 division	16 division	24 division	360 division
1:White	Power wire	+V					
2:Black	Power wire	GND(0V)					
3:Shield wire	Power wire	F.G.					
1:Black	Output wire	TP1					BCD CODE(2^0)
2:Brown	Output wire	BCD CODE(2^0)	BCD CODE(2^0)	BCD CODE(2^0)	BCD CODE(2^0)	BCD CODE(2^0)	BCD CODE(2^1)
3:Red	Output wire	BCD CODE(2^1)	BCD CODE(2^1)	BCD CODE(2^1)	BCD CODE(2^1)	BCD CODE(2^1)	BCD CODE(2^2)
4:Orange	Output wire	BCD CODE(2^2)	BCD CODE(2^2)	BCD CODE(2^2)	BCD CODE(2^2)	BCD CODE(2^2)	BCD CODE(2^3)
5:Yellow	Output wire	N.C.	BCD CODE(2^3)	BCD CODE(2^3)	BCD CODE(2^3)	BCD CODE(2^3)	BCD CODE(2^0×10)
6:Green	Output wire	N.C.	N.C.	BCD CODE(2^0 ×10)	BCD CODE(2^0 ×10)	BCD CODE(2^0 ×10)	BCD CODE(2^1 ×10)
7:Blue	Output wire	N.C.	N.C.	N.C.	N.C.	BCD CODE(2^1 ×10)	BCD CODE(2^2 ×10)
8:Purple	Output wire	N.C					BCD CODE(2^3 ×10)
9:Gray	Output wire	TP2					BCD CODE(2^0 ×100)
10:White	Output wire	EP(PARITY)					BCD CODE(2^1 ×100)
11:Shiled wire	Output wire	F.G.					

※Unused wires must be insulated.
※Encoder case and shield wire must be grounded(F.G.).
※N.C.: Not Connected.
※TP1/TP2 : It is an enablement signal to decide signal recognition for output easily because, output signal cycle is long in low resolution model.
※EP : It is a parity signal to be outputted as odd number of parity.
※Output cable must not be short-circuited, because Driver IC is used in output circuit.

▣Dimensions

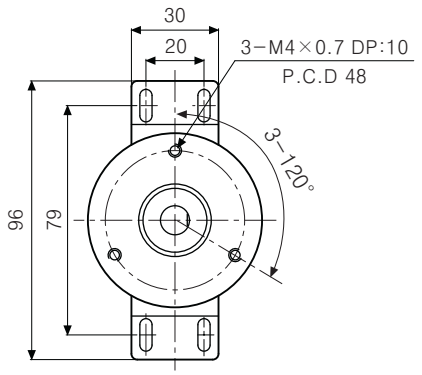

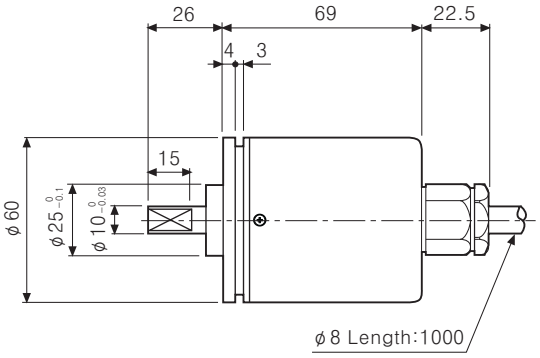

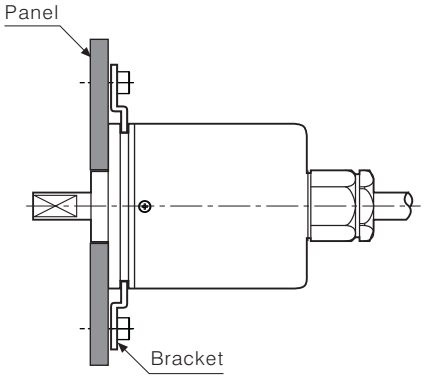

●Bracket

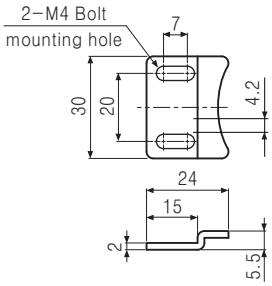

●Coupling(ENP)

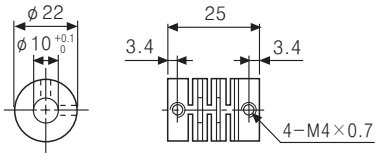

Unit:mm

Absolute multi-turn rotary encoder(EPM50 Series)

▣Ordering information

EPM50S	8	–	10	13	–	B	–	PN	–	24	–	No mark
Series	Shaft diameter		Single-turn	Multi-turn		Output code		Control output		Power supply		Cable
Diameter ϕ50mm	ϕ8mm		10bit (1024 division)	13bit (8192 division)		Binary Code		PN:Parallel NPN open collector output S :SSI		12-24VDC ±5%		No mark:Rear side outgoing type S:Side outgoing cable type

▣Specifications

Type			Diameter ϕ50mm Multi-turn shaft type of absolute rotary encoder	
Model			**EPM50S8-1013-B-S-24**	**EPM50S8-1013-B-PN-24**
Appearances & Dimensions			CE Line-up [ϕ50mm, L90.5mm]	
Resolution	Single-turn		1024 division(10Bit)	
	Multi-turn		8192 revolution(13Bit)	
Rotation limit when power is off			**(※1)** ±90°	
Electrical specification	Output	Output code	24bit, Binary 2 code	Binary 2 code
		Output Interface	SSI(Synchronous Serial Interface)	Parallel
		Output type	Line driver	NPN open collector output
		Output signal	Single-turn data, Multi-turn count, **(※2)** OVF alarm	
		Line driver output	• Low: Sink current – max. 20mA, Residual voltage – max. 0.5VDC • High: Sink current – max. –20mA, Output voltage – max. 2.5VDC	———
		NPN open collector output	———	Sink current : Max. 32mA, Residual voltage : Max. 1VDC
		Logic	———	Negative logic output
		Response time	———	Max. 1μs(Cable: 2m, I sink = 32mA)
	Input	Input signal	**(※3)** Single-turn data reset, **(※4)** Multi-turn count reset, Direction, Clear	
			———	Latch
		Input level	High : 5-24VDC, Low : 0-1.2VDC	
		Input logic	**(※5)** Low active, HIGH or OPEN for common use	
		Input time	Direction : Over 100ms	
			Single-turn data reset : Over 100ms	
			Multi-turn count reset : Over 100ms	
			Clear : Over 100ms	
			No Latch function	Latch : Over 500μs
		SSI Clock Input Frequency	100kHz to 1MHz	———
Electrical specification	Max. Response frequency		———	50kHz
	Power supply		12-24VDC, ±5%(Ripple P-P : Max. 5%)	
	Current consumption		Max. 150mA(Disconnection of the load)	Max. 100mA(Disconnection of the load)
	Insulation resistance		Min. 100MΩ(At 500VDC between all terminals and case)	
	Dielectric strength		750VAC 50/60Hz for 1 minute(Between all terminals and case)	
	Connection		Cable outgoing type(Cable gland)	
Mechanical specification	Starting torque		Max. 40gf · cm(0.004N · m)	
	Moment of inertia		Max. 40g · cm²(4×10⁻⁶ kg · m²)	
	Shaft loading		Radial : 10kgf, Thrust : 2.5kgf	
	Max. revolution		**(※6)** 3000rpm	
Vibration			1.5mm amplitude at frequency of 10 to 55Hz (for one minute cycle) in each of X, Y, Z direction for 2 hours	
Shock			Max. 50G	
Ambient temperature			-10 to 70℃, Storage : -25 to 85℃(At non-freezing status)	
Ambient humidity			35 to 85%RH	
Protection			IP64(IEC standard)	
Cable			ϕ6mm 10P, Length : 2m, Shield cable	ϕ6mm 17P×2, Length : 2m, Shield cable
Accessory			Mounting bracket, Coupling	
Unit weight			Approx. 322g	Approx. 475g

(※1) It calibrates the multi-turn counts by comparing single-turn data before/after power off without counting multi-turn counts when power is off. It shall be used on the condition that no over-rated revolution occurred since proper multi-turn data may not be available if any revolutions occurred over ±90° from the position when power is off.
(※2)OVF alarm is ON when multi-turn count is out of counting range (0 to 8191 revolution).
It shall be initialized by changing the setting of direction or applying multi-turn count reset or clear signals.
(※3) Single-turn data shall be initialized as 「0」 when single-turn data reset is input.
(※4) Multi-turn count shall be initialized as 「0 revolution」 when multi-turn count reset is input. **(※5)**High active is customizable.
(※6) In case of Parallel type model, select the resolution to make max. response revolution is lower than max. allowable revolution.

【Max. Response Revolution (rpm) = $\frac{\text{Max. Allowable Revolution}}{\text{Resolution}} \times 60$ sec.】

Absolute multi-turn rotary encoder(EPM50 Series)

▣Connections

●SSI output

Cable			
Cable color	Description	Cable color	Description
Brown	CLOCK+	Gray	Single-turn data reset
Red	CLOCK-	Blue	Multi-turn count reset
Orange	DATA+	Purple	Clear
Yellow	DATA-	Green	Direction
White	+V (12-24VDC)		
Black	GND (0V)		
Shield wire	Signal shield cable(F.G.)		

●Parallel output

Multi-turn count cable(Sheath color : Black)		
Cable color	Description	
Brown	Multi-turn count	2^0
Red		2^1
Orange		2^2
Yellow		2^3
Green		2^4
Blue		2^5
Purple		2^6
Gray		2^7
Pink		2^8
Clear		2^9
Light brown		2^{10}
Light yellow		2^{11}
Light green		2^{12}
Light blue	OVF	
Light purple	Multi-turn count reset	
White	+V(12-24VDC)	
Black	GND(0V)	
Shield wire	Signal shield cable(F.G.)	

Single-turn data cable(Sheath color : Gray)		
Cable color	Description	
Brown	Single-turn data	2^0
Red		2^1
Orange		2^2
Yellow		2^3
Green		2^4
Blue		2^5
Purple		2^6
Gray		2^7
Pink		2^8
Clear		2^9
Light brown	NC	
Light yellow	Direction	
Light green	Latch	
Light blue	Clear	
Light purple	Single-turn data reset	
White	+V(12-24VDC)	
Black	GND(0V)	
Shield wire	Signal shield cable(F.G.)	

※Please wire properly.
※As for parallel output, it is recommended to connect +V and GND of both multi-turn count cable and single-turn data cable.
※The metal case and shield wire of encoder should be grounded (F.G.).
※Input/Output cable must not be short-circuited, because Driver IC is used in output circuit.

▣Dimensions

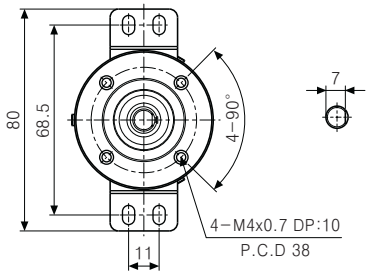

●Bracket

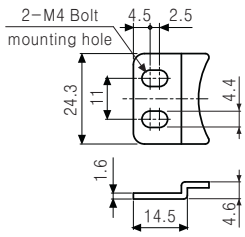

●Coupling(EPM50)

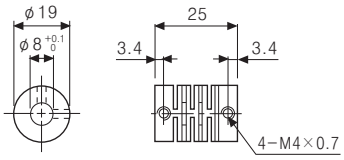

●SSI output

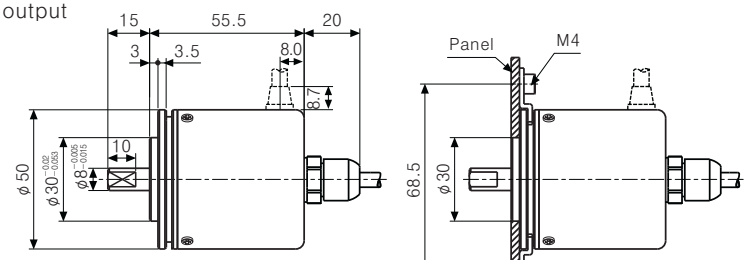

●Parallel output

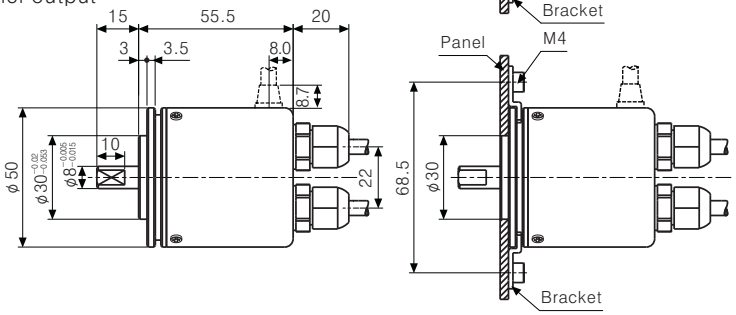

Unit:mm

Encoder connector cable / General connector cable

▣Ordering information

◎Connector cable(Socket type)

C I D 6 S - 2

- 2 — Cable length(m)
- S — Socket type
- 6 — Number of connector pin
- D — DC power type
- I — I-type
- C — Connector

※A cable length is customizable.

◎Connector connection cable(Socket-Plug type)

C I D 13 P - 2 - S I

- I — I-type
- S — Socket type
- 2 — Cable length(m)
- P — Plug type
- 13 — Number of connector pin
- D — DC power type
- I — I-type
- C — Connector

※A cable length is customizable.

▣Dimensions

◎Connector cable(Socket type)

●**CID6S-2, CID6S-5, CID6S-10** (Totem pole output / NPN open collector output / Voltage output)

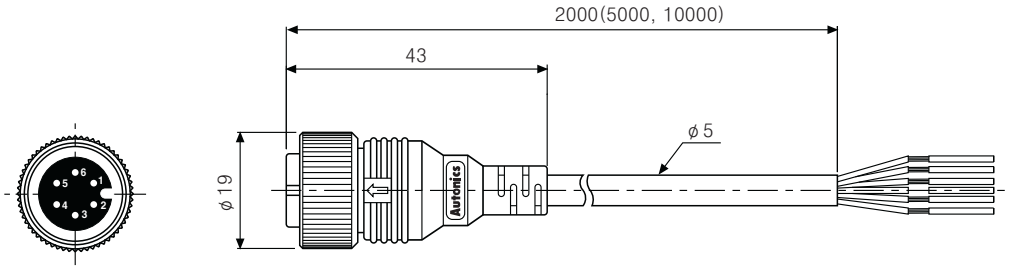

●**CID9S-2, CID9S-5, CID9S-10** (Line driver output)

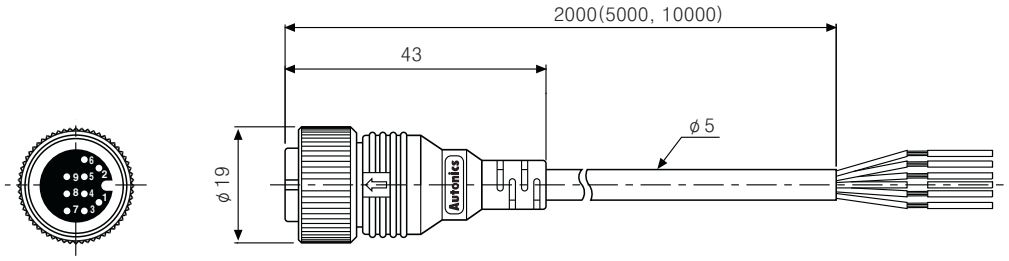

●**CID13S-2, CID13S-5, CID13S-10**

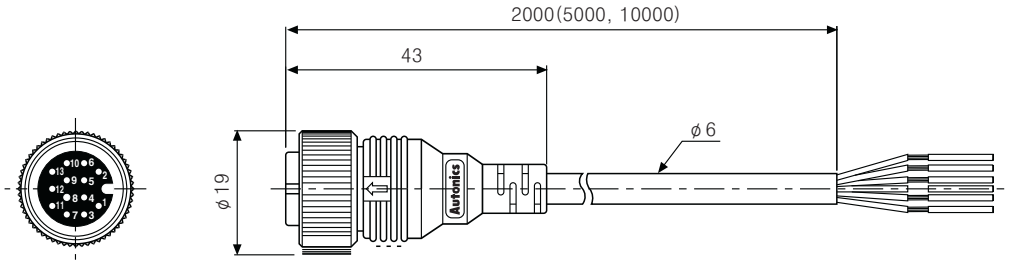

◎Connector connection cable(Socket-Plug type)

●**CID13P-2-SI, CID13P-5-SI, CID13P-10-SI**

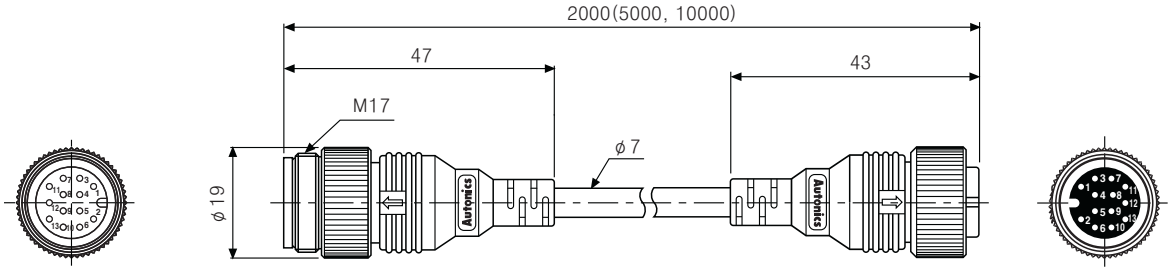

Unit:mm

Multi-channel modular type temperature controller(TM Series)

▣Ordering information

TM 4 — N 2 R B

Module type	B		Basic module
	E		Expansion module
Control output	2 Channel	R	Relay output
		C	Current or SSR output selectable
	4 Channel	R	Relay output
		S	SSR drive output
Power supply	2		24VDC
Alarm output	2 Channel	2	Alarm1+Alarm2 relay contact output
		4	Alarm1+Alarm2+Alarm3+Alarm4 relay output
	4 Channel	N	None(※No sub output)
Channel	2		2 Channel
	4		4 Channel
Item	TM		Multi-channel modular temperature controller

※Make sure to purchase both expansion module and basic module together since power supply/ communication terminals are provided with basic modules only.

▣Specifications

Model		TM2-22RB	TM2-42RB	TM2-22RE	TM2-42RE	TM2-22CB	TM2-42CB	TM2-22CE	TM2-42CE	TM4-N2RB	TM4-N2RE	TM4-N2SB	TM4-N2SE
Appearances & Dimensions		[W30×H100×L84.8mm]								[W30×H100×L84.8mm]			
Channel		2 / 4-Channel (Channel Isolated - Dielectric Strength 1,000 VAC)											
Power Supply		24VDC											
Allowable voltage range		90 to 110% of rated voltage											
Power consumption		Max. 5W(At maximum load)											
Indicating type		Non-indicating type parameter setting & monitoring with external devices (PC or PLC)											
Input type	RTD	DPt100Ω, JPt100Ω 3 wire (Allowable line resistance : Max. 5Ω)											
	Thermocouples	K, J, E, T, L, N, U, R, S, B, C, G, PLII(13types)											
Indicating accuracy	RTD	(Bigger one either PV ±0.5% or ±1℃) ±1digit Max.											
	Thermocouples (※1)												
	CT input	(±5% F.S.) ±1digit Max.								———			
Influence of Temperature (※2)	RTD	(Bigger one either PV ±0.5% or ±2℃) ±1digit Max.(In case of thermocouple input, it is ±5℃ at -100℃ below.) • Thermocouples L, U, C, G, R, S, B : (Bigger one either PV ±0.5% or ±5℃) ±1digit Max.											
	Thermocouples												
Control output	Relay	250VAC 3A 1a				———				250VAC 3A 1a		———	
	SSR	———				12VDC ±3V 30mA Max.				———		22VDC ±3V 30mA Max.	
	Current	———				DC 4-20mA or DC 0-20mA selectable (Load 500Ω Max.)				———			
Current output accuracy		(±1.5% F.S.) ±1digit Max.								———			
Sub output	Relay	250VAC 3A 1a								———			
	Communication	RS485 Communication output (Modbus RTU)											
Event Input	Leakage current	Approx. Max. 4mA								———			
	Contacts	ON : Max. 1KΩ, OFF : Max. 100KΩ								———			
	Non-contacts	ON : Max. 1.5V residual voltage, OFF : Max. 0.1mA leakage current								———			
CT input		0.0-50.0A(Primary current meaurement range) ※CT ratio 1000:1								———			
Control method	heating, cooling	ON/OFF and P, PI, PD, PID control											
	heating&cooling												
Hysteresis		Thermocouples/RTD : 1 to 100℃/℉(0.1 to 100℃/℉) variable								1 to 100digit			
Proportional band (P)		0.1 to 999.9℃											
Integral time (I)		0 to 9999 sec.											
Derivative time (D)		0 to 9999 sec.											
Control period (T)		0.1 to 120.0 sec.											
Manual reset value		0.0 to 100.0%											
Sampling period		50ms(2 channel synchronous sampling)								100ms(4 channel synchronous sampling)			
Dielectric strength		1000VAC 50/60Hz for 1 min. (between power source terminal and input terminal)											
Vibration resistance		0.75mm amplitude at frequency of 5 to 55Hz(for 1 min.) in each X, Y, Z direction for 2 hours											
Relay life cycle	Mechanical	Min. 10,000,000 times											
	Electrical	Min. 100,000 times (250VAC 3A resistance load)											
Insulation resistance		100MΩ(at 500VDC megger)											
Noise resistance		Square shaped noise by noise simulator (pulse width 1μs) ±0.5kV											

(※1) In case of thermocouple K, T, N, J, E at -100℃ below and L, U, PlatinelⅡ, it is ±2℃±1digit Max.
In case of thermocouple B, indicating accuracy cannot be ensured under 400℃.
In case of thermocouple R, S at 200℃ below and thermocouple C, G, it is 3℃±1digit Max.

(※2) Applied when used out of range 23±5℃.

Multi-channel modular type temperature controller(TM Series)

▣Connections

●TM2 Series

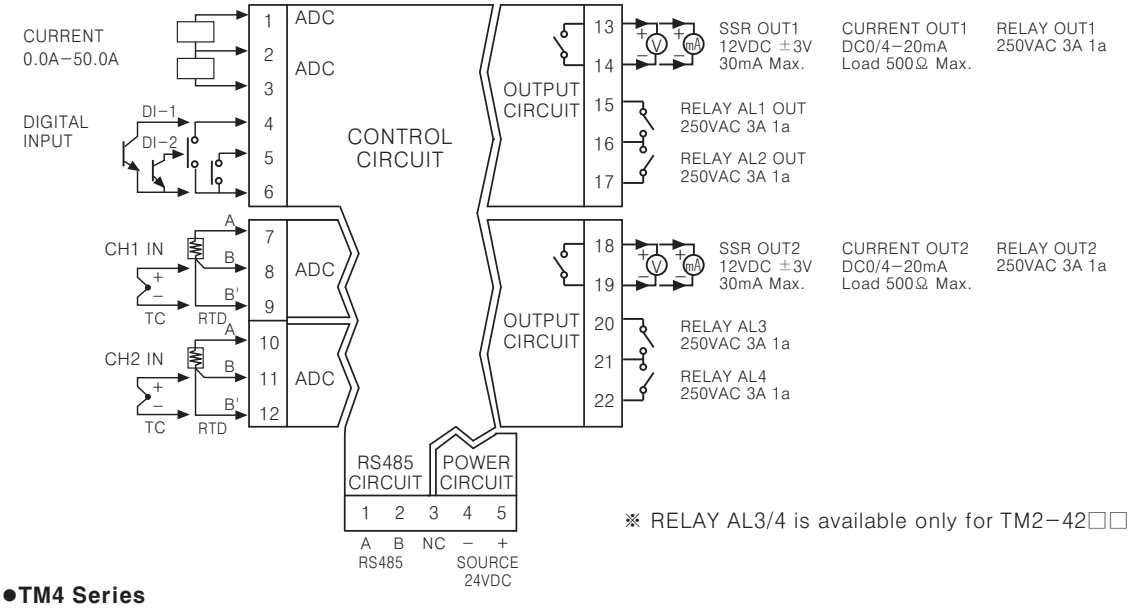

※ RELAY AL3/4 is available only for TM2-42□□ model.

●TM4 Series

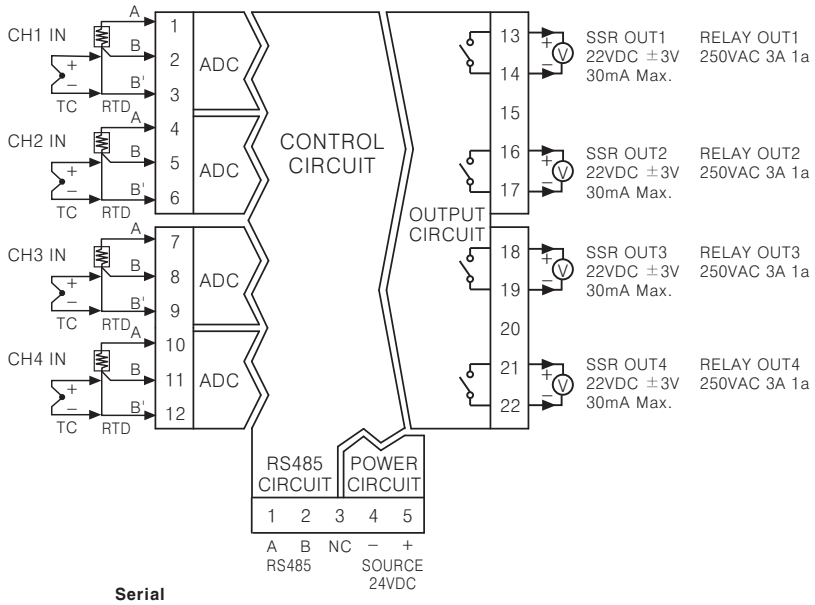

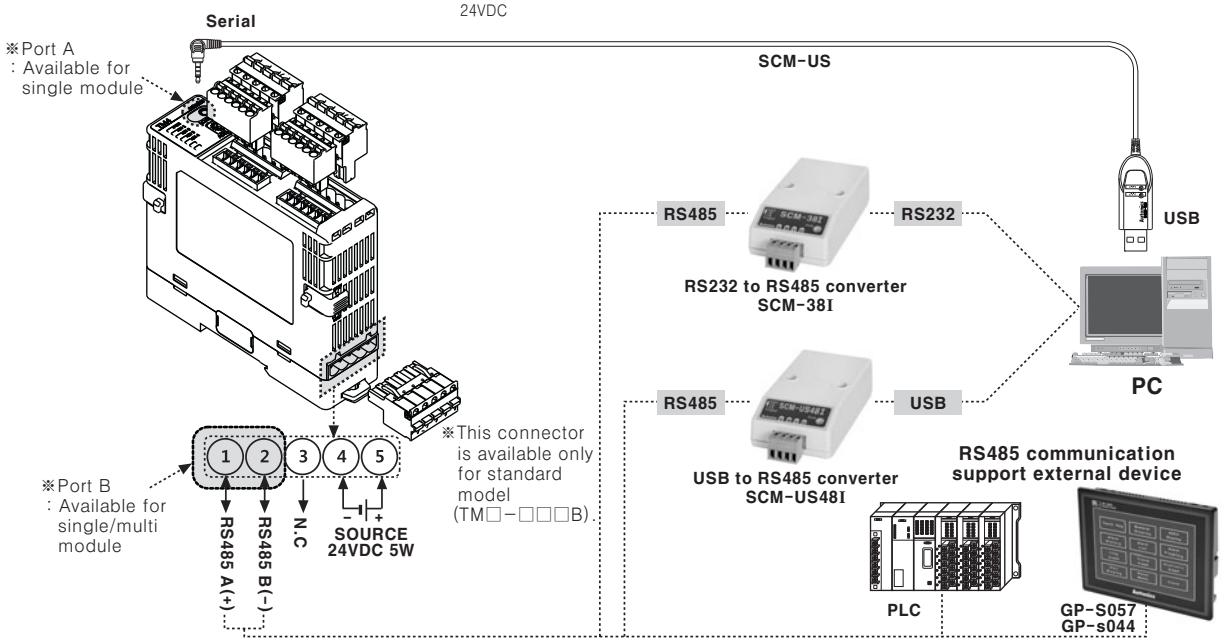

Standard PID temperature controller(TK Series)

▣Ordering information

TK 4 S − 1 4 R R

OUT2 control output (※3)	Standard	N	None ※Select in case of standard control(Heating or Cooling)
	Heating & Cooling	R	Relay output
		C	Current output+SSR drive output
OUT1 control output(※2)	R		Relay output
	S		SSRP output
	C		Current output+SSR drive output
Power supply	4		100−240VAC 50/60Hz
Sub output(※1)	SP	1	ALARM1 output
	S M W H L	1	ALARM1 output
		2	ALARM1+ALARM2 output
		R	ALARM1+Transmission output
		T	ALARM1+RS485 Communication output
		A	ALARM1+ALARM2+Transmission output
		B	ALARM1+ALARM2+RS485 Communication output
Size	SP		DIN W48×H48mm(11pin plug type)(※4)11pin Socket(PG−11,PS−11): Sold separately
	S		DIN W48×H48mm(Terminal block type)
	M		DIN W72×H72mm
	W		DIN W96×H48mm
	H		DIN W48×H96mm
	L		DIN W96×H96mm
Digit	4		9999(4digit)
Item	TK		Temperature / Process controller

(※1) In case of SP series, option control output selection and digital input will be limited due to number of terminals.
(※2) "S" represents SSRP drive voltage output support model which SSR standard/cycle/phase control are available.
"C" represents both current and SSR(standard) output support model.
(※3) Select "R" or "C" type in case of using heating&cooling control. Select "N" type in case of using standard(Heating or Cooling) control.

▣Specifications

Model		TK4SP	TK4S	TK4W	TK4H	TK4M	TK4L
Appearances & Dimensions		NEW [W48×H48×L72.2mm]	NEW [W48×H48×L64.5mm]	NEW [W96×H48×L64.5mm]	NEW [W48×H96×L64.5mm]	NEW [W72×H72×L64.5m]	NEW [W96×H96×L64.5mm]
Power supply		100−240VAC 50/60Hz					
Allowable voltage range		90 to 110% of rated voltage					
Power consumption		Max. 8VA					
Display method		7 Segment(Red), Other display part(Green, Yellow, Red) LED					
Character size	PV(W×H)	7.0mm×14.0mm		9.5mm×20.0mm	8.5mm×17.0mm	7.0mm×14.6mm	11.0mm×22.0mm
	SV(W×H)	5.0mm×10.0mm		7.5mm×15.0mm	6.0mm×12.0mm	6.0mm×12.0mm	7.0mm×14.0mm
Input type	RTD	JPt100Ω, DPt100Ω, DPt50Ω, Cu100Ω, Cu50Ω, Nikel 120Ω(6types)					
	Thermcouples	K, J, E, T, L, N, U, R, S, B, C, G, PLII(13types)					
	Analog	Voltage: 0−100mV, 0−5V, 1−5V, 0−10V(4types) / Current: 0−20mA, 4−20mA(2types)					
Display accuracy	RTD	At room temperature(23℃±5℃): (PV ±0.3% or ±1℃, select the bigger one) ±1digit Out of range of room temperature: (PV ±0.5% or ±2℃, select the bigger one) ±1digit In case of TK4SP series, ±1℃ will be added.					
	Thermcouples						
	Analog	At room temperature(23℃±5℃): ±0.3% F.S. ±1digit, Out of range of room temperature: ±0.5℃% F.S. ±1digit					
	CT input	±5% F.S. ±1digit					
Control output	Relay	250VAC 3A 1a					
	SSR	11VDC±2V 20mA Max.					
	Current	DC4−20mA or DC0−20mA(Load 500Ω Max.)					
Sub output	Relay	AL1, AL2 Relay: 250VAC 3A 1a(TK4SP: AL1 only)					
	Transmission	DC4−20mA (Load 500Ω Max., Accuracy: ±0.3% F.S.)					
	Communication	RS485 communication output(Modbus RTU)					
Option input	CT	0.0−50.0A(Primary heater current value measuring range) ※CT ratio = 1000:1(except TK4SP)					
	Digital input	• Contact Input: ON−Max. 2kΩ, OFF−Min. 90kΩ • Non−contact Input: ON−Residual votage max. 1.0V, OFF−leakage current max. 0.1mA ※ TK4S/M−1EA(due to limited terminals), TK4H/W/L−2EA(except TK4SP)					
Control type	heating,cooling	ON/OFF, P, PI, PD, PID control mode					
	heating&cooling						
Hysteresis		• Thermcouples / RTD: 1 to 100℃/°F(0.1 to 100.0℃/°F) variable • Analog: 1 to 100digit					
Proportional band(P)		0.1 to 999.9℃(0.1 to 999.9%)					
Integral time(I)		0 to 9999 sec.					
Derivative time(D)		0 to 9999 sec.					
Control period(T)		0.1 to 120.0 sec.(※Relay output and SSR drive output only)					
Manual reset value		0.0 to 100.0%					
Sampling period		50ms					

Standard PID temperature controller(TK Series)

▣Parts description

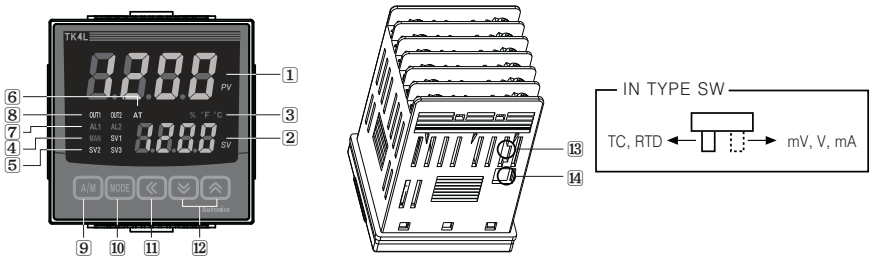

1 PV display part : It shows current temperature (PV) in RUN mode and parameters in Setting mode.
2 SV display part : It shows setting temperature value (SV) to control in RUN mode and each parameter setting value in Setting mode.
3 Unit(℃ / ℉ / %) Indicator : It shows current temperature unit.
4 Manual dontrol indicator : It will be ON in case of selecting manual control mode.
5 Multi SV indicator : One of SV1 to 3 lamp will be ON in case of selecting multi SV function.
6 Auto-Tuning indicator : It will be flashing every 1 sec. during Auto-tuning.
7 Alarm output indicator : It will be ON when each alarm output is ON.
8 Control output(Heating, Cooling) indicator : It will be ON when control output is ON.
※In case that SSRP output type is control/phase mode, it will be ON when MV is over 3.0%.
※In case of selecting current output (DC4-20mA, DC0-20mA),
- Manual control mode: It will be always ON except MV is 0.0%.
- Auto control mode: It will be ON when MV is over 3.0%, and OFF when MV is below 2.0%.
9 A/M key : Used when switching auto control mode ↔ manual control mode
※ In case of TK4S/SP model(W48×H48mm), MODE key will be used for the same function (auto control mode ↔ manual control mode switching).
10 MODE key : Used when entering into parameter setting mode and moving parameters.
11 ≪ key : Used when entering into set value change mode and Digit moviong.
12 ≫, ⌃ key : Used when entering itnto set value change mode and changing set value(Digit).
13 Input selection switch : Used when switching sensor(TC, RTD) input ↔ analog input(mV, V, mA).
14 PC loader port : PC loader port for serial communication enables to set parameter and monitor by PC. Use this port for connecting SCM-US (USB to Serial converter).

▣Connections

●TK4S

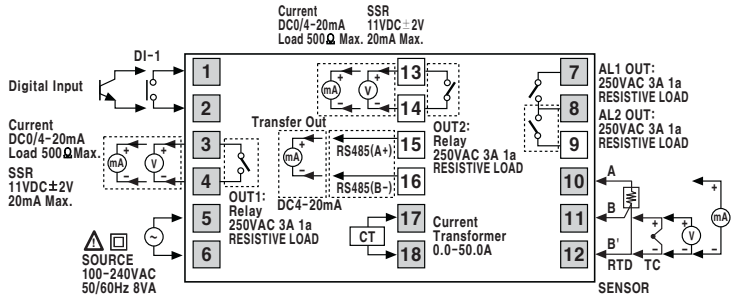

●TK4SP ※11pin Socket(PG-11,PS-11): Sold separately

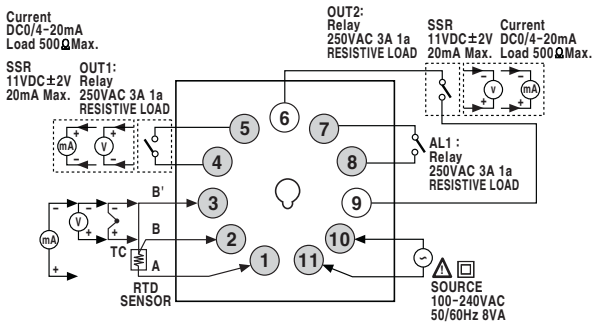

●TK4M

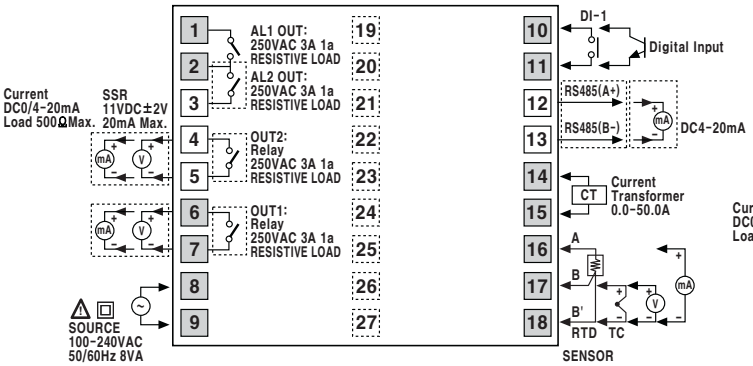

●TK4H, TK4W, TK4L

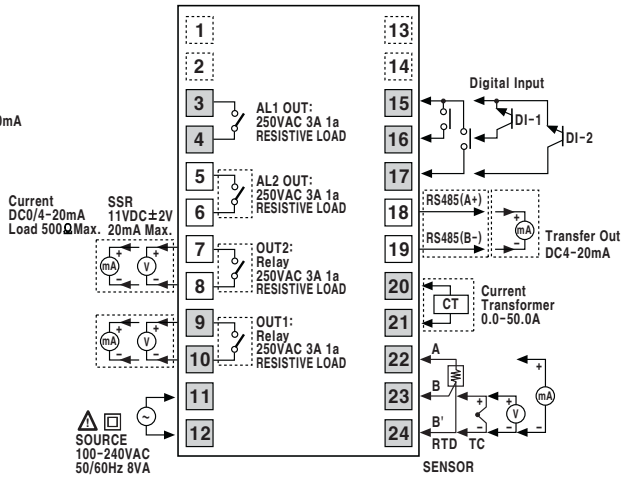

※Standard model has shaded terminals only.
※Digital input is not electrically insulated from internal circuits, so it should be insulated when connecting other circuits. (Photocoupler, Relay, Indenpendent switch)

Economical dual display PID temperature controller(TCN Series)

▣Ordering information

T CN 4 S − 1 4 R

Control output	R	Relay contact output + SSRP output (AC power) Relay contact output + SSR output (AC/DC power)
Power supply	2	24VAC 50/60Hz, 24−48VDC
	4	100−240VAC 50/60Hz
Sub output	2	Alarm1 output+Alarm2 output
Size	S	DIN W48×H48mm
	M	DIN W72×H72mm
	H	DIN W48×H96mm
	L	DIN W96×H96mm
Digit	4	9999(4digit)
Setting type	CN	Dual display type, set by touch switch
Item	T	Temperature controller

▣Specifications

Model		TCN4S	TCN4M	TCN4H	TCN4L
Appearances & Dimensions		CE c UL us (Acquiring certification) NEW [W48×H48×L65mm]	CE c UL us (Acquiring certification) NEW [W72×H72×L65mm]	CE c UL us (Acquiring certification) NEW [W48×H96×L65mm]	CE c UL us (Acquiring certification) NEW [W96×H96×L65mm]
Power supply	AC power	100−240VAC 50/60Hz			
	AC/DC Power	24VAC 50/60Hz, 24−48VDC			
Allowable voltage range		90 to 110% of rated voltage			
Power con−sumption	AC power	Max. 5VA(100−240VAC 50/60Hz, 24VAC 50/60Hz)			
	AC/DC Power	Max. 3W(24−48VDC)			
Display method		7 Segment LED display(PV : Red, SV : Green)			
Character size	PV(W×H)	7.0×15.0mm	9.5×20.0mm	7.0×14.6mm	11.0×22.0mm
	SV(W×H)	5.0×9.5mm	7.5×15.0mm	6.0×12.0mm	7.0×14.0mm
Input type	RTD	DPt100Ω, Cu50Ω(Allowable line resistance max. 5Ω per a wire)			
	TC	K(CA), J(IC), L(IC), T(CC), R(PR), S(PR)			
Display method	RTD	(※1) Based on room temperature (23℃ ±5℃): (PV ±0.5% or ±1℃ higher one) rdg ±1digit In case of out of room temperature range: (PV ±0.5% or ±2℃ higher one) rdg ±1digit			
	TC				
Control output	Relay	250VAC 3A 1a			
	SSR	12VDC ±2V 20mA Max.			
Alarm output		AL1, AL2 relay output : 250VAC 1A 1a			
Control method		ON/OFF and P, PI, PD, PID control			
Hysteresis		1 to 100℃ / 0.1 to 50.0℃			
Proportional band(P)		0.1 to 999.9℃			
Integral time(I)		0 to 9999sec.			
Derivative time(D)		0 to 9999sec.			
Control period		0.5 to 120.0sec.			
Manual reset		0.0 to 100.0%			
Sampling period		100ms			

(※1): ・In case of room temperature (23℃ ±5℃)
Below 200℃ of thermocouple R, S is PV ±0.5% or ±3℃ higher one ±1digit
Over 200℃ of thermocouple R, S is PV ±0.5% or ±2℃ higher one ±1digit
Termocouple L (IC), RTD Cu50Ω is PV ±0.5% or ±2℃ higher one ±1digit
・In case of out of room temperature range
Below 200℃ of thermocouple R, S is PV ±1.0% or ±6℃ higher one ±1digit
Over 200℃ of thermocouple R, S is PV ±0.5% or ±5℃ higher one ±1digit
RTD Cu50Ω is PV ±0.5% or ±3℃ higher one ±1digit

Economical dual display PID temperature controller(TCN Series)

▣Parts description

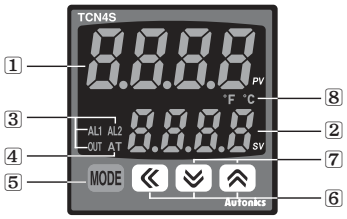

1 Present temperature (PV) display (Red)
- RUN mode: Present temperature (PV) display
- Parameter setting mode: Parameter display

2 Set temperature (SV) display (Green)
- RUN mode: Set temperature (SV) display
- Parameter setting mode: Parameter setting value display

3 Control/Alarm output display lamp
- OUT : When control output ON, this lamp turns ON.
  ※During SSRP control output type in CYCLE/PHASE control, this lamp turns ON when MV is over 3.0%.
- AL1/AL2: When AL1, AL2 alarm output ON, this lamp turns ON.

4 Auto tuning lamp
AT lamp flashes by every 1 sec during operating auto tuning.

5 MODE key
Used when entering into parameter setting group, returning to RUN mode, moving parameter, and saving setting values.

6 Adjustment
Used when entering into set value change mode, digit moving and digit up/down.

7 Digital input key
Press ⊻ + ⊼ keys for 3 sec. to operate the set function(RUN/STOP, alarm output reset, auto tuning) in digital input key[dI -b].

8 Temperature unit(℃/°F) indicator
It shows current temperature unit.

▣Connections

※TCN4 series has selectable control output; Relay output, and SSRP output. AC/DC voltage type has Relay output and SSR output and it is selectable.

●TCN4S

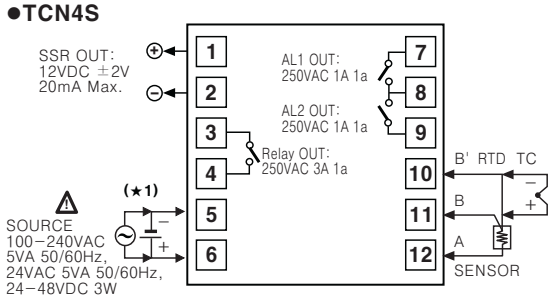

●TCN4M

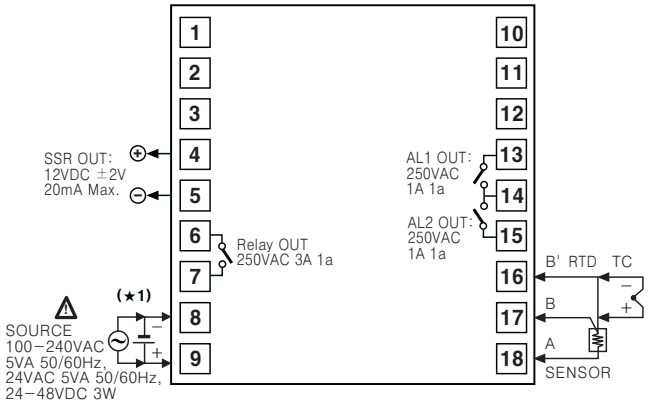

●TCN4H/L

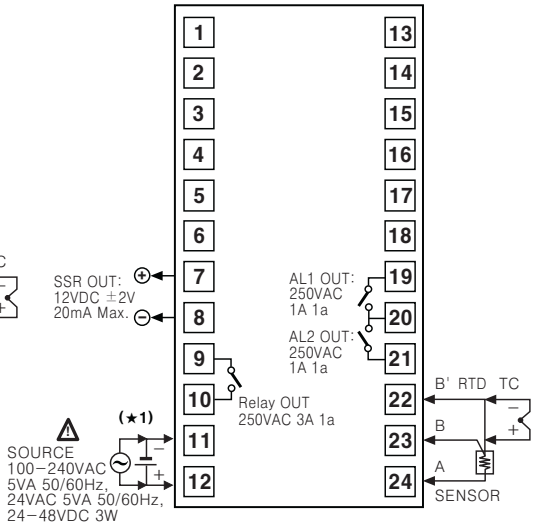

※**(★1)** Power supply
- AC power : 100−240VAC 5VA 50/60Hz
- Low voltage 24VAC 5VA 50/60Hz, 24−48VDC 3W

Economical temperature controller(TC Series)

▣Ordering information

T C 4 S − 1 4 R

Control output	N	Indicator − Without control output
	R	Relay contact output+SSRP output
Power supply	2	24−48VDC, 24VAC 50/60Hz
	4	100−240VAC 50/60Hz
Alarm output	N	No alarm output
	1	Alarm1 output
	2	Alarm1 output+Alarm2 output**(※1)**
Size	S	DIN W48×H48mm(Terminal block type)
	SP	DIN W48×H48mm(Plug type)**(※2)**
	Y	DIN W72×H36mm
	M	DIN W72×H72mm
	H	DIN W48×H96mm
	W	DIN W96×H48mm
	L	DIN W96×H96mm
Digit	4	9999(4digit)
Setting type	C	Set by touch switch
Item	T	Temperature controller

(※1) It is unavailable for TC4SP, TC4Y.
(※2) 11 Pin Socket(PG−11, PS−11): Sold separately

▣Specifications

Model		TC4S	TC4SP	TC4Y	TC4M	TC4H	TC4W	TC4L
Appearances & Dimensions		[W48×H48×L64.5mm]	[W48×H48×L72.2mm]	[W72×H36×L77mm]	[W72×H72×L64.5mm]	[W48×H96×L64.5mm]	[W96×H48×L64.5mm]	[W96×H96×L64.5mm]
Power supply	AC power	100−240VAC 50/60Hz						
	AC/DC Power	24−48VDC, 24VAC 50/60Hz						
Allowable voltage range		90 to 110% of rated voltage						
Power con−sumption	AC power	Max. 5VA(100−240VAC 50/60Hz, 24VAC 50/60Hz)						
	AC/DC Power	Max. 3W(24−48VDC)						
Display method		7Segment(Red), Other display(Green, Yellow, Red LED)						
Character size		W7.0×H15mm		W7.4×H15mm	W9.5×H20mm	W7.0×H14.6mm	W9.5×H20mm	W11×H22mm
Input type	RTD	DPt100Ω(Allowable line resistance max. 5Ω per a wire)						
	TC	K(CA), J(IC), L(IC)						
Display method	TC, RTD	**(※1)** (PV ±0.5% or ±1℃ higher one) rdg ±1digit **(※2)** ※TC4SP (Plug type) is (PV ±0.5% or ±2℃ higher one) rdg ±1digit ☞Based on room temperature(23℃ ±5℃)						
Output	Relay	250VAC 3A 1a						
	SSR	12VDC ±2V 20mA Max.						
	Sub	AL1, AL2 relay output : 250VAC 1A 1a(※TC4SP, TC4Y have AL1 only.)						
Control method		ON/OFF and P, PI, PD, PID control						
Hysteresis		1 to 100℃/°F(CA, JIC, LIC, dPt.H, CUS.H) / 0.1 to 50.0℃/°F(dPt.L, CUS.L)						
Proportional band		0.1 to 999.9℃						
Integral time(I)		9999sec.						
Derivative time(D)		9999sec.						
Control period		0.5 to 120.0sec.						
Manual reset		0.0 to 100.0%						
Sampling period		100ms						

(※1) In case of out of room temperature range: (PV ±0.5% or ±2℃ higher one)rdg ±1digit
L(IC) and RTD Cu50: (PV ±0.5% or ±3℃ higher one)rdg ±1digit
(※2) In case of out of room temperature range for TC4SP: (PV ±0.5% or ±3℃ higher one)rdg ±1digit
L(IC) and RTD Cu50: (PV ±0.5% or ±4℃ higher one)rdg ±1digit

Economical temperature controller(TC Series)

▣Front panel identification

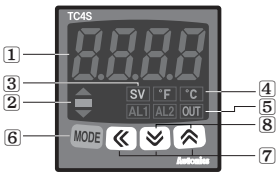

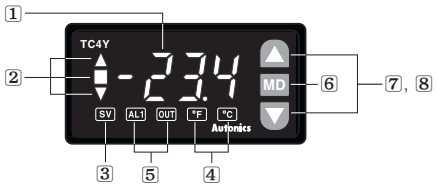

1 Temperature display
It shows current temperature(PV) in RUN mode and parameter and set value for each setting group in parameter change mode.

2 Deviation indicator, Auto-tuning indicator
-It shows current temperature(PV) deviation based on set temperature(SV) by LED.

No	PV deviation temp.	Deviation display
1	Over 2℃	▲ lamp on
2	Below ±2℃	■ lamp on
3	Under -2℃	▼ lamp on

-Deviation indicator(▲, ■, ▼) is flashed by every 1sec. when operating auto tuning.

3 Set temperature(SV) indicator
Press any front key once to check or change current set temperature (SV), set temperature(SV) indicator is on and preset set value is flashed.

4 Temperature unit(℃/°F) indicator:It shows current temperature unit.

5 Control/alarm output indicator
-OUT : It will light up when control output(Main Control Output) is on.
※In case of CYCLE/PHASE control, it will light up when MV is over 3.0%.(Except for AC/DC power type)
-AL1/AL2 : It will light up when alarm output AL1/AL2 are on.

6 MODE Key : Used when entering into parameter setting group, returning to RUN mode, moving parameter and saving setting values.

7 Adjustment : Used when entering into set value change mode Digit moving and Digit Up/down.

8 FUNCTION key : Press ⊻+⊼ keys for 3 sec. to operate function(RUN/STOP, alarm output cancel) set in inner parameter[dI -H].
※Press ⊻+⊼ keys once in set value operation to move digit.

▣Connections

※TC4 series has selectable control output; Relay output, and SSRP output. AC/DC voltage type has Relay output and SSR output and it is selectable.

●TC4S

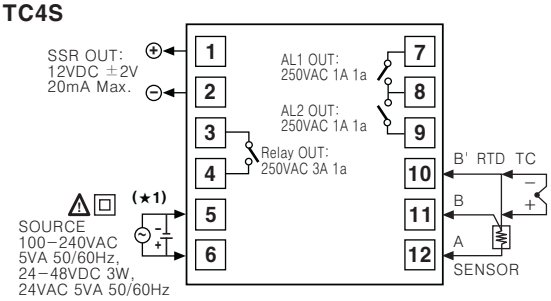

●TC4SP

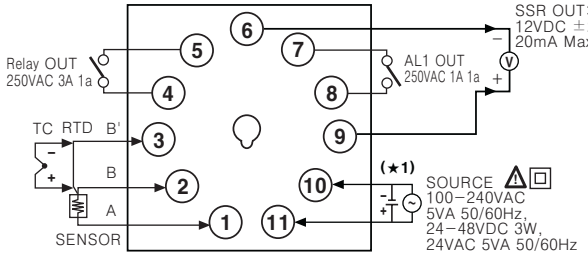

●TC4Y

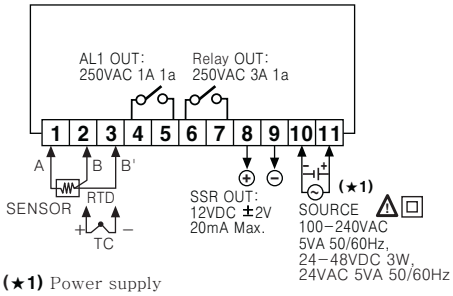

※(★1) Power supply
-AC power : 100-240VAC 50/60Hz
-Low voltage : 24-48VDC, 24VAC 50/60Hz

●TC4W

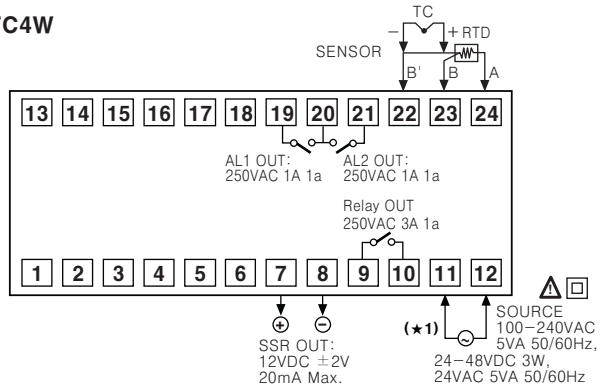

●TC4M

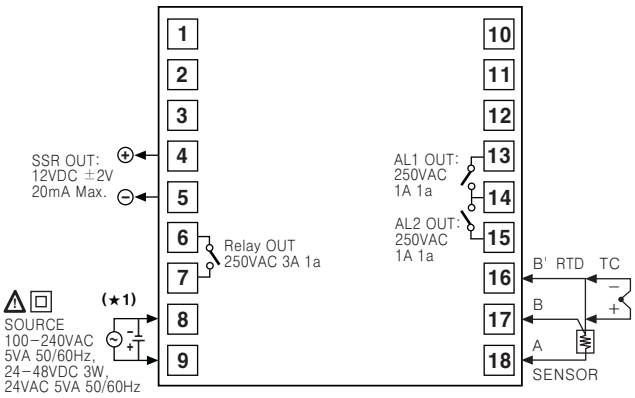

※(★1) Power supply
-AC power : 100-240VAC 50/60Hz
-AC/DC power : 24-48VDC 3W, 24VAC 50/60Hz

●TC4H/L

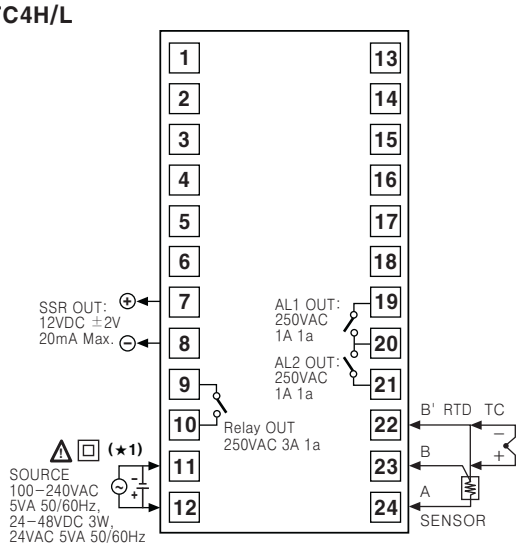

Digital switch PID temperature controller(TD Series)

▣Ordering information

T D 4 M − 1 4 R

Control output (※1)	TD4SP/TD4M	R: Relay contact output
		S: SSR drive output
		C: Current output
	TD4H/TD4L/TD4LP	R: Relay contact output+SSR drive output
		C: Current output+SSR drive output
Power supply		4: 100−240VAC 50/60Hz
Alarm output		N: No alarm output
		1: Alarm 1 output
		2: Alarm 1 output+Alarm 2 output
Size		SP: DIN W48×H48mm(8pin plug type)(※2)
		M: DIN W72×H72mm
		H: DIN W48×H96mm
		L/LP: DIN W96×H96mm
Digit		4: 9999(4digit)
Setting type		D: Set by digital switch
Item		T: Temperature controller

(※1)Control output type is different depending on model size.
(※2)8 Pin Socket(PG−08, PS−08) : Sold separately

▣Specifications

Model		TD4SP	TD4M	TD4H	TD4L	TD4LP
Appearances & Dimensions		[W48×H48×L64.6mm]	[W72×H72×L64.5mm]	[W48×H96×L64.5mm]	[W96×H96×L64.5mm]	[W96×H96×L64.5mm]
Power supply		100−240VAC 50/60Hz				
Allowable voltage range		90 to 110% of rated voltage				
Power consumption		Max. 5VA				
Display method		7 Segment(Red), Other display part(Green, Yellow, Red LED)				
Character size		H15mm×W7mm	H18mm×W9mm	H15mm×W7mm	H22mm×W11mm	
Input type	RTD	DPt100Ω(Allowable line resistance max. 5Ω per a wire)				
	TC	K(CA), J(IC)				
Display accuracy	RTD	(PV ±0.5% or ±1℃ higher one) rdg ±1digit ※TD4SP (Plug type) is (PV ±0.5% or ±2℃ higher one) rdg ±1digit				
	TC					
Control output	Relay	250VAC 3A 1c	250VAC 3A 1a			
	SSR	24VDC±3V 20mA Max				
	Current	DC4−20mA (Load resistance Max. 600Ω)				
Sub output		———	AL1 relay output : 250VAC 1A 1a	AL1, AL2 relay output : 250VAC 1A 1a		AL1 relay output : 250VAC 1A 1a
Control method		ON/OFF and P, PI, PD, PID control				
Hysteresis		1 to 100℃/℉				
Proportional band(P)		0.1 to 999.9℃/℉				
Integral time(I)		9999sec.				
Derivative time(D)		9999sec.				
Control period(T)		0.5 to 120.0sec.				
Manual reset		0.0 to 100.0%				
Sampling period		100ms				

Digital switch PID temperature controller(TD Series)

▣Front panel identification

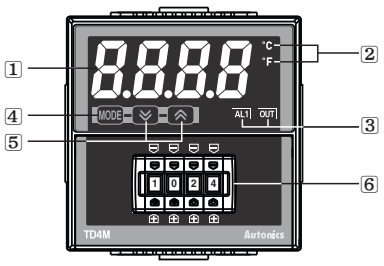

1 Temperature display
It shows current temperature(PV) in RUN mode and parameter and set value for each setting group in parameter change mode.
2 Temperature unit indicator(℃/℉) : It shows current temperature unit.
2 Auto-tuning indicator
Temperature unit indicator(℃ or ℉) is flashing by every 1 sec during auto tuning operation.
Set [oFF] to stop auto tuning operation, it maintains previous P, I, D setting values.
If error [Er.Su, oPEn] occurs during operation, auto tuning stops.
※Auto tuning operates continuously if error [HHHH], [LLLL] occurs. If it is satisfied with the condition, it finishes auto tuning normally.
3 Control/sub output indicator
-It will light up when control output(Main Control Output) is on.
※For current output type, if MV is below 2%, it turns OFF. If MV is over 3%, it turns ON.
-AL1/AL2: It will light up when alarm output AL1/AL2 is on.
4 MODE Key : Used when entering into parameter setting group, returning to RUN mode, moving parameter and saving setting values.
5 Adjustment : Used when entering into set value change mode, Digit moving and Digit Up/down Press ⊠+⊠keys at the same time to move digit, to execute, or release the set function in digital input key setting (dI -H).
6 Digital Switch : Set the setting temperature (SV) to be controlled.

▣Connections

●TD4SP-N4□ (Indicator only, no alarm output model)

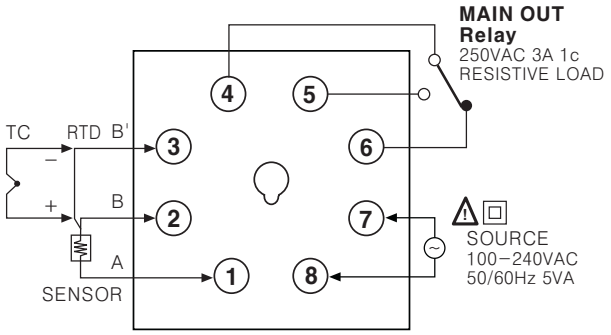

MAIN OUT	
SSR	Current
24VDC ±3V 20mA Max.	DC4-20mA Load 600Ω Max.

※8 Pin Socket(PG-08, PS-08)
: Sold separately

●TD4M

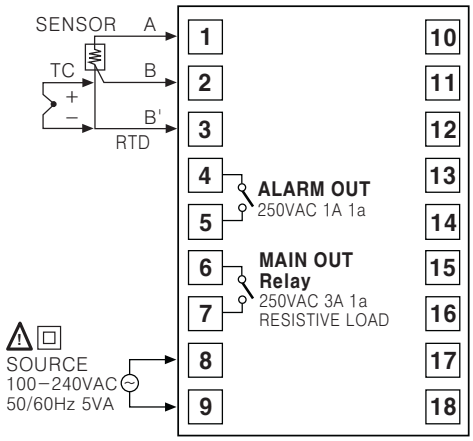

MAIN OUT	
SSR	Current
24VDC ±3V 20mA Max.	DC4-20mA Load 600Ω Max.

●TD4H/TD4L

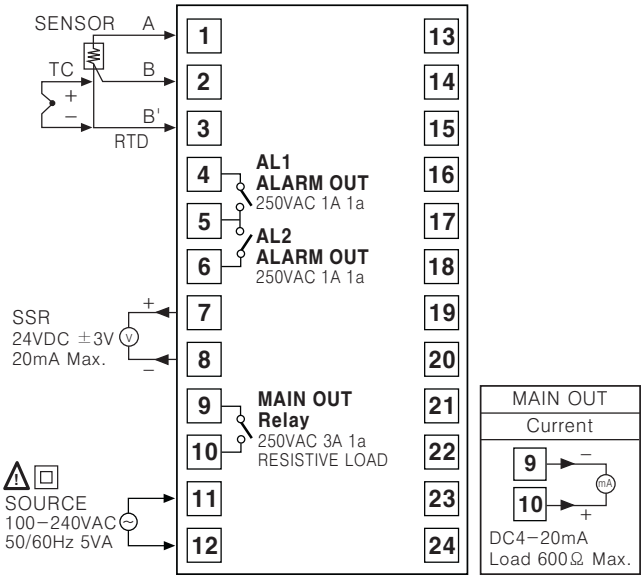

●TD4LP

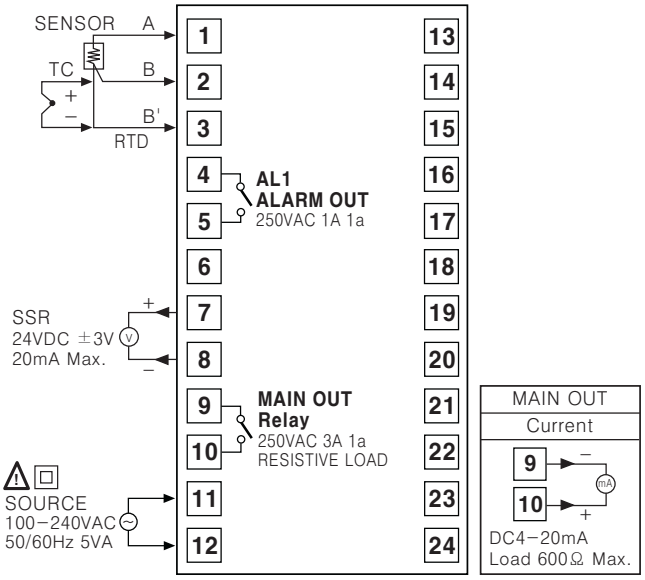

Analog and non-indicating PID temperature controller(TA Series)

▣Ordering information

TA S – B 4 R P 4 C

Unit

C	Celsius(℃)
F	Fahrenheit(°F)

Temperature range for each sensor

	℃	°F	Temperature sensor		
0	−50 to 100	−58 to 212	Pt	–	–
1	0 to 100	32 to 212	Pt	–	K
2	0 to 200	32 to 392	Pt	J	K
3	0 to 300	32 to 572	–	J	–
4	0 to 400	32 to 752	Pt	J	K
6	0 to 600	32 to 1,112	–	–	K
8	0 to 800	32 to 1,472	–	–	K
C	0 to 1,200	32 to 2,192	–	–	K

Sensor input type

P	DPt100Ω
J	J(IC)
K	K(CA)

Control output

R	Relay output
S	SSR drive output

Power supply

4	100−240VAC 50/60Hz

Control method

B	ON/OFF control & PID control combined

Size

S	DIN W48 x H48mm(8pin plug type)(※1)
M	DIN W72 x H72mm
L	DIN W96 x H96mm

Item

TA	Analog setting type temperature controller

(※1) 8pin socket(PG−08, PS−08) : sold separately.

▣Specifications

Model		TAS	TAM	TAL
Appearances & Dimensions		NEW [W48×H48×L66.5mm]	NEW [W72×H72×L64.5mm]	NEW [W96×H96×L64.5mm]
Power supply		100−240VAC 50/60Hz		
Allowable voltage range		90 to 110% of rated voltage		
Power consumption		Max. 4VA		
Display method		Deviation LED(Red, Green), Output LED(Red)		
Setting type		Dial setting		
Setting accuracy		(※1) F.S. ±2% (Room temperature 23℃±5℃)		
Input type	RTD	DPt100Ω(Allowable line resistance max. 5Ω per a wire)		
	Thermocouples	K(CA), J(IC)		
Control	ON/OFF Control	Hysteresis : 2℃ Fixed		
	PID Control	Control period : Realy output−20sec./SSR drive output−2sec.		
Control output	Relay	250VAC 3A 1c		
	S S R	12VDC±2V 20mA Max.		
Functions		PV deviation indicatable, Error indicatable		

(※1) <Except room temperature range> Below 100℃ medel is F.S. ±4% , Over 100℃ model is F.S. ±3%

▣Connections

※RTD(Resistance Temperature Detector) : DPt100Ω(3−wire type) ※Thermocouple : K(CA), J(IC)

●TAS

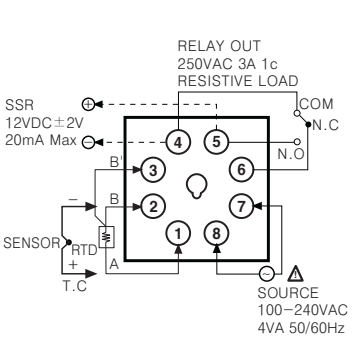

●TAM

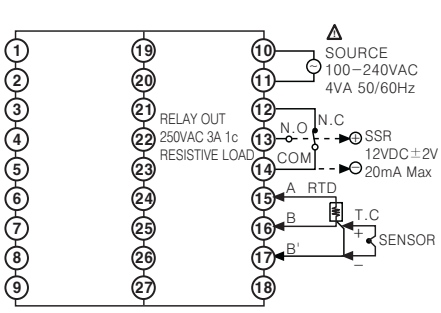

●TAL

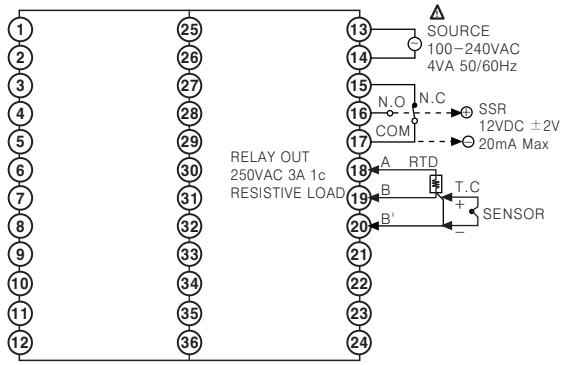

Dual PID auto tuning temperature controller(TZ/TZN Series)

▣Ordering information

TZ 4 M — 1 4 R

Control output	R	Relay contact output
	S	SSR drive output
	C	Current output(DC4−20mA)
Power supply (※1)	2	24VAC/24−48VDC
	4	100−240VAC 50/60Hz
Sub output: TZ4SP/TZN4S	1	Event 1 output
Sub output: TZ4ST	1	Event 1 output
	2	Event 1+Event 2 output
	R	Event 1+PV transmission output(DC4−20mA)
Sub output: Etc.	1	Event 1 output
	2	Event 1+Event 2 output
	R	Event 1+PV transmission output(DC4−20mA)
	A	Event 1+Event 2+PV transmission output(DC4−20mA)
	T	Event 1+RS485 communication output
	B	Event 1+Event 2+RS485 communication output
Size: TZN4	S	DIN W48×H48mm(Terminal block type)
Size: TZ4	SP	DIN W48×H48mm(Plug type)
	ST	DIN W48×H48mm(Terminal block type)
Size: TZ4/TZN4	M	DIN W72×H72mm
	W	DIN W96×H48mm
	H	DIN W48×H96mm
	L	DIN W96×H96mm
Digit	4	9999(4digit)
Item	TZ	Temperature controller(PID)
	TZN	Temperature controller(PID New type)

(※1) Only for TZ4SP, TZ4ST, TZ4L, TZN4M series.

▣Specifications

Model		TZ4SP	TZ4ST	TZ4M	TZ4H	TZ4W	TZ4L
Appearances & Dimensions		[W48×H48×L95mm]	[W48×H48×L95mm]	[W72×H72×L100mm]	[W48×H96×L100mm]	[W96×H48×L100mm]	[W96×H96×L100mm]
Power supply		100−240VAC 50/60Hz, 24VAC 50/60Hz / 24−48VDC (※1) [90 to 110% of rated voltage]					
Power consumption		Approx. 5VA		Approx. 6VA(Low voltage type ☞ AC:Approx. 8VA, DC:Approx. 7W)			
Display method		7Segment LED display【Process value(PV) : Red, Setting value(SV) : Green】					
Character size		W4.8×H7.8mm		PV:W9.8×H14.2mm SV:W8×H10mm	W3.8×H7.6mm	W8×H10mm	PV:W9.8×H14.2mm SV:W8×H10mm
Input	Thermocouple	K(CA), J(IC), R(PR), E(CR), T(CC), S(PR), N(NN), W(TT)<Tolerance of line resistance is max. 100Ω per a wire>					
	RTD	DPt100Ω, JPt100Ω, 3 wire type <Tolerance of line resistance is max. 5Ω per a wire>					
	Analog	1−5VDC, 0−10VDC, DC4−20mA					
Control output	Relay	250VAC 3A 1c					
	SSR	12VDC ±3V 30mA Max.					
	Current	DC4−20mA(Resistive load Max. 600Ω)					
Sub output	Transmission	———	PV transmission : DC4−20mA Load Max. 600Ω				
	Event 1	250VAC 1A 1a					
	Event 2		250VAC 1A 1a				
	Communi−cation	———	———	RS485(PV transmission, SV setting)			
Control method		ON/OFF and P, PI, PD, PIDF, PIDS control					
Display accuracy		F.S ±0.3% or 3℃(Higher one)					
Sampling period		0.5sec.					
LBA setting time		1 to 999sec.					
RAMP setting time		Ramp Up, Ramp Down at 1 to 99min.					

(※1)Low voltage is only for TZ4SP, TZ4ST, TZ4L series.

Dual PID auto tuning temperature controller(TZ/TZN Series)

▣Specifications

Model		TZN4S	TZN4M	TZN4H	TZN4W	TZN4L
Appearances & Dimensions		[W48×H48×L90mm]	[W72×H72×L85mm]	[W48×H96×L100mm]	[W96×H48×L100mm]	[W96×H96×L100mm]
Power supply		100−240VAC 50/60Hz, 24VAC/24−48VDC(※1) [90 to 110% of rated voltage]				
Power consumption		Approx. 5VA	Approx. 6VA(Low voltage type ☞ AC:Approx. 8VA, DC:Approx. 7W)			
Display method		7Segment LED display【Process value(PV) : Red, Setting value(SV) : Green】				
Character size		PV : W7.8×H11mm SV : W5.8×H8mm	PV : W8×H13mm SV : W5×H9mm	PV : W7.8×H11mm SV : W5.8×H8mm	W8×H10mm	PV : W9.8×H14.2mm SV : W8×H10mm
Input	Thermocouple	K(CA), J(IC), R(PR), E(CR), T(CC), S(PR), N(NN), W(TT) <Tolerance of line resistance is max. 100Ω per a wire>				
	RTD	DPt100Ω, JPt100Ω, 3 wire type <Tolerance of line resistance is max. 5Ω per a wire>				
	Analog	1−5VDC, 0−10VDC, DC4−20mA				
Control output	Relay	250VAC 3A 1c				
	SSR	12VDC ±3V 30mA Max.				
	Current	DC4−20mA(Resistive load Max. 600Ω)				
Sub output	Transmission	———	PV transmission : DC4−20mA Load Max. 600Ω			
	Event 1	250VAC 1A 1a				
	Event 2		250VAC 1A 1a			
	Communi−cation	———	RS485(PV transmission, SV setting)			
Control method		ON/OFF and P, PI, PD, PIDF, PIDS				
Display accuracy		F.S ±0.3% or 3℃(Higher one)				
Sampling period		0.5sec.				
LBA setting time		1 to 999sec.				
RAMP setting time		Ramp Up, Ramp Down at 1 to 99min.				

(※1)Low voltage is only for TZN4M series.

▣Front panel identification

●TZN4S

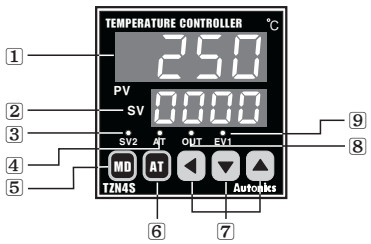

●TZN4M

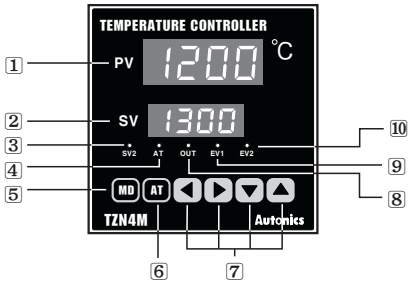

●TZ4ST/TZ4SP

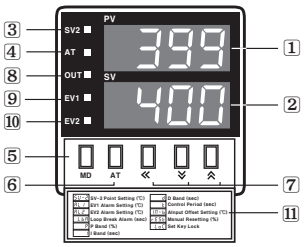

●TZ4M

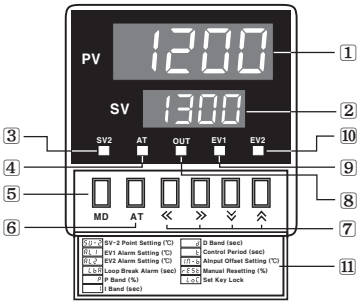

1 PV : Display Processing value(Red)
2 SV : Display Setting value(Green)
3 Indicate SV2 operation
4 AT Key : Indicate Autotuning operation
5 MD Key : Mode key
6 AT Key : Autotuning operation key
7 Setting keys
8 OUT : Indicate control output operation
9 EV1 : Indicate EVENT 1 output
10 EV2 : Indicate EVENT 2 output
11 Procedure of setting key

※Since TZ4SP uses same identification plate with TZ4ST, the lamp does not work even though it has a EV2 output signal lamp.
※There are no(▶, ≫)Key in TZ4SP, TZ4ST, TZ4H, TZ4W, TZN4S, TZN4H and TZN4W.
※Control output indicator(OUT) does not work when it is used as current output type.

Dual PID auto tuning temperature controller(TZ/TZN Series)

▣Connections

※RTD(Resistance Temperature Detector) : DPt100Ω(3-wire type), JPt100Ω(3-wire type)
※T.C(Thermocouple) : K, J, R, E, T, S, W, N
※In case of Analog input, please use T.C terminal and be careful about polarity.

●TZ4SP

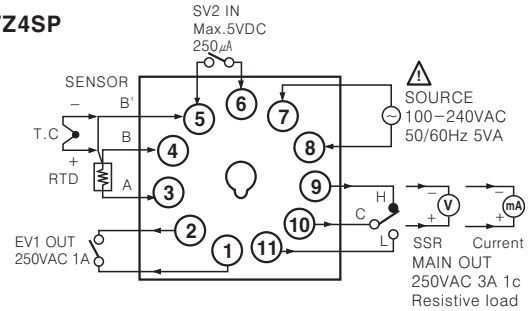

●TZN4S

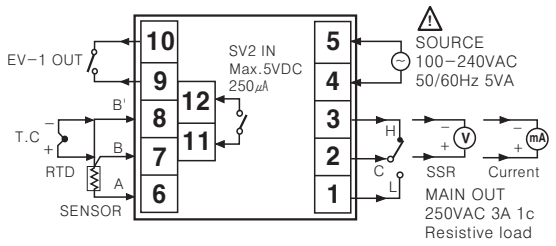

●TZ4ST

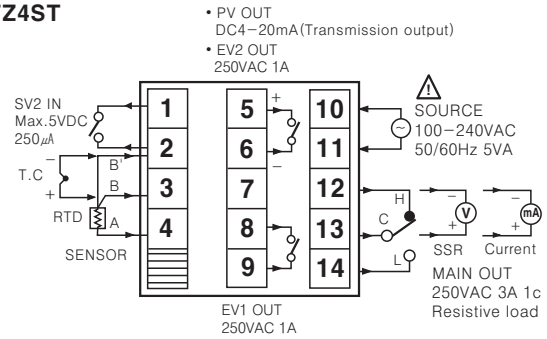

●TZN4M

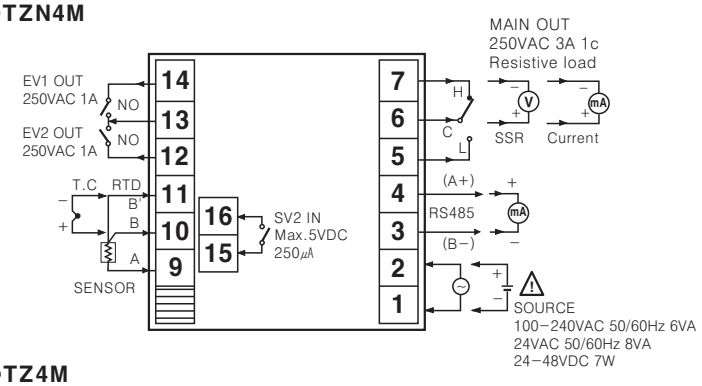

●TZ4W
●TZN4W

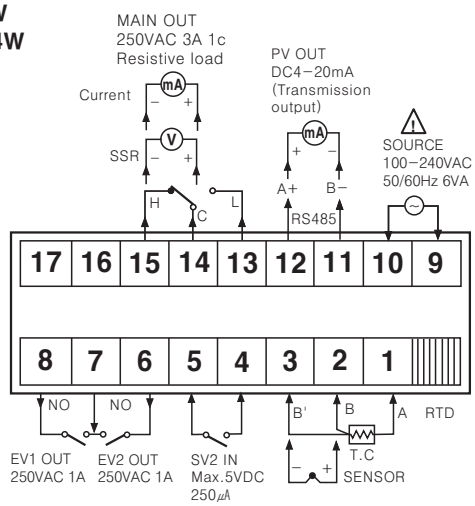

●TZ4M

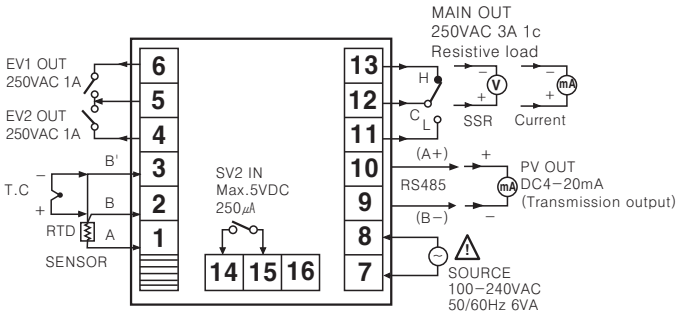

●TZ4H
●TZN4H

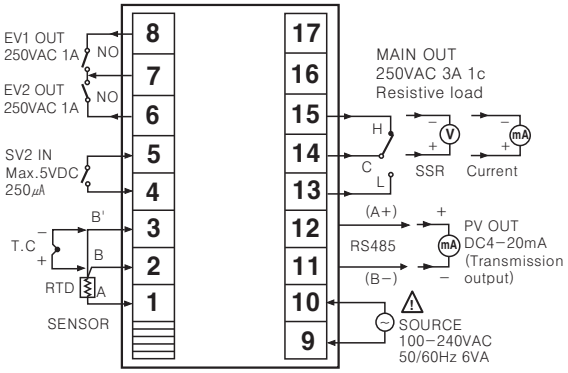

●TZ4L
●TZN4L

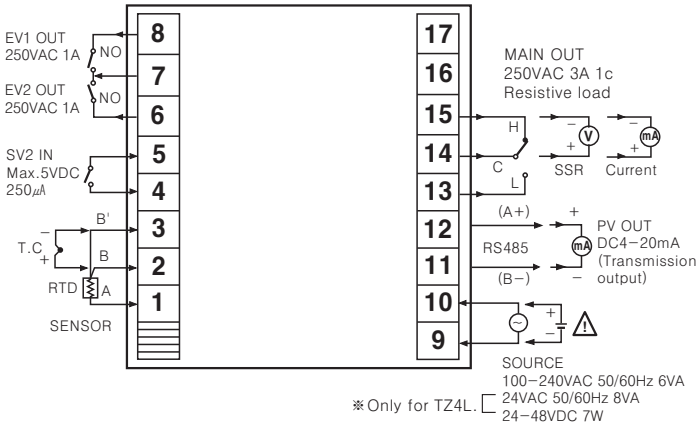

※Only for TZ4L.

Standard temperature controller(T3S/T3H/T4M/T4L Series)

▣Ordering information

T 3 S – B 4 R P 4 C

Unit

C	Celsius(℃)
F	Fahrenheit(℉)

Temperature range

0	−99 to 199, −99.9 to 199.9
1	0 to 99.9
2	0 to 199
4	0 to 399
8	0 to 799
A	0 to 999
C	0 to 1200
F	600 to 1600

Sensor input type

P	Pt100Ω
J	J(IC)
K	K(CA)
R	R(PR)

Control output

R	Relay output
S	SSR output
C	Current outut(DC4−20mA)

Power supply

3	110/220VAC 50/60Hz
4	100−240VAC 50/60Hz

Control method

B	ON/OFF, Proportional control

Size

S	DIN W48×H48mm
H	DIN W48×H96mm
M	DIN W72×H72mm
L	DIN W96×H96mm

Digit

3	999(3digit)
4	9999(4digit)

Item

T	Temperature controller

※Please check the range of temperature when selecting a model.

▣Temperature range for each sensor

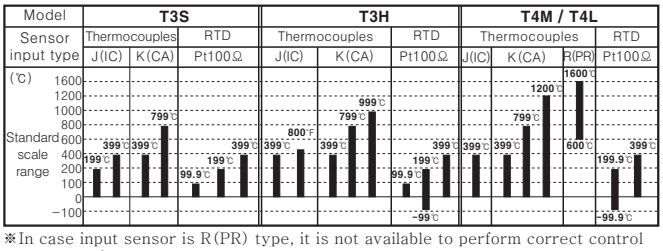

※In case input sensor is R(PR) type, it is not available to perform correct control under 600℃.

▣Specifications

Model		T3S	T3H	T4M	T4L
Appearances & Dimensions		[W48×H48×L88mm]	[W48×H96×L134mm]	[W72×H72×L112mm]	[W96×H96×L100mm]
Power supply		100−240VAC 50/60 Hz	110/220VAC 50/60 Hz		
Allowable voltage range		90 to 110% of rated voltage			
Power consumption		5VA	3VA		
Display method		7Segment LED display			
Character size		W4×H8mm	W6×H10mm	W7.2×H9.8mm	W9.5×H14.2mm
Display accuracy		F.S. ±1% rdg ±1digit	F.S. ±0.5% rdg ±1digit		
Setting type		Digital switch setting			
Setting accuracy		F.S. ±1%	F.S. ±0.5%		
Sensor input		T.C(Thermocouples) : K(CA), J(IC), R(PR) / RTD : Pt100Ω(3−wire type) <There is no R(PR) in T3S, T3H series>			
Input line resistance		T.C(Thermocouples) : Max. 100Ω / RTD : Max. 5Ω per a wire			
Control method	ON/OFF	Hysteresis : F.S. 0.5% ±0.2% Fixed	Hysteresis : F.S. 0.2 to 3%		
	Proportional	Proportional band : F.S. ±3% fixed, Period : 20sec. fixed	Proportional band : F.S. 1 to 10% variable, Period : 20sec. fixed		
RESET adjuster range		F.S. ±3% variable			
Control output		• Relay output : 250VAC 2A 1c • SSR output : 12VDC ±3V 20mA Max. • Current output : DC4−20mA Load 600Ω Max.	• Relay output : 250VAC 3A 1c • SSR output : 24VDC ±3V 20mA Max. • Current output : DC4−20mA Load 600Ω Max.		
Self−diagnosis		Built−in burn out function			

▣Connections

※RTD(Resistance temperature detector) : Pt100Ω(3−wire type), T.C(Thermocouple) : K, J, R

●T3S

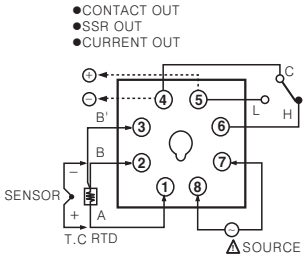

●T4M

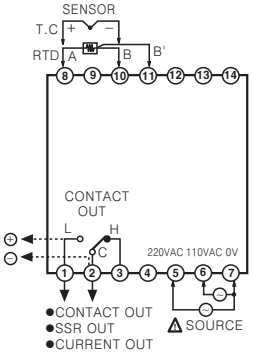

●T3H

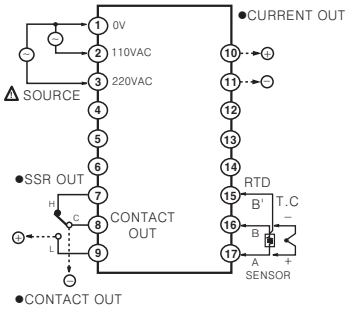

●T4L

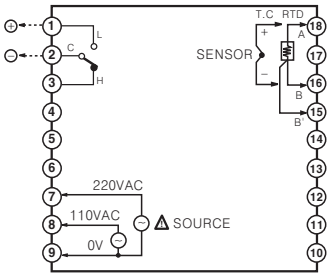

Alarm output temperature controller(T3HS/T3HA/T4MA/T4LA Series)

▣Ordering information

T 3 H A – B 3 R P 4 C

Unit	C	Celsius(℃)
Temperature range	0	−99 to 199, −99.9 to 199.9
	2	0 to 199.9
	4	0 to 399
	8	0 to 799
	A	0 to 999
	C	0 to 1200
	F	600 to 1600
Sensor input type	P	Pt100Ω
	J	J(IC)
	K	K(CA)
	R	R(PR)
Control output	R	Relay output
	S	SSR output
	C	Current output(DC4−20mA)
Power supply	3	110/220VAC 50/60Hz
Conrol method	B	ON/OFF, Proportional control
Alarm/Sub output mode	A	Alarm output(High • Low)
	S	SUB output
	P	Dual output (※1)
Size	H	DIN W48×H96mm
	M	DIN W72×H72mm
	L	DIN W96×H96mm
Digit	3	999(3digit)
	4	9999(4digit)
Item	T	Temperature controller

(※1)Only for T4LP Type

※Please check the range of temperature when selecting a model.

▣Temperature range for each sensor

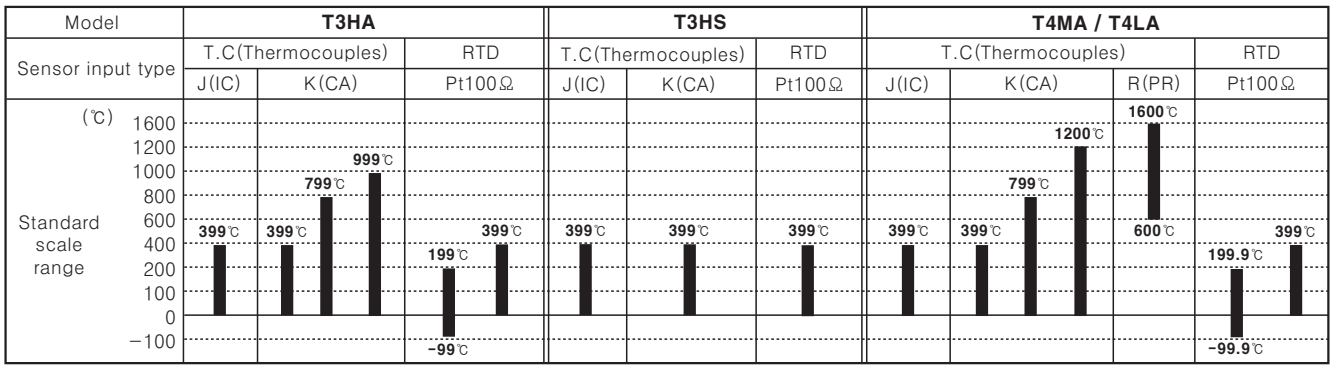

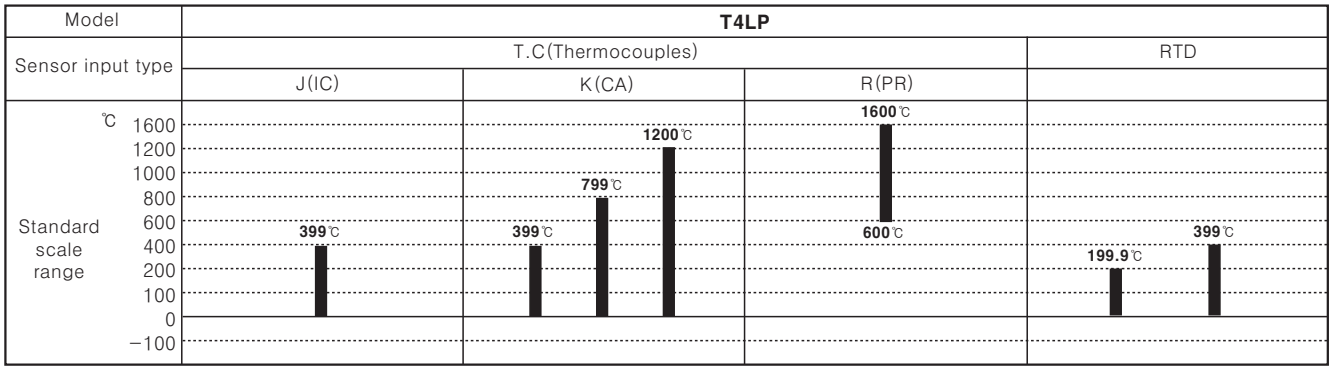

※In case input sensor is R(PR) type, it is not available to perform correct control under 600℃.

Alarm output temperature controller(T3HS/T3HA/T4MA/T4LA Series)

▣Specifications

Model		T3HS	T3HA	T4MA	T4LA	T4LP
Appearances & Dimensions		[W48×H96×L146mm]	[W48×H96×L146mm]	[W72×H72×L125mm]	[W96×H96×L118mm]	※Dual setting type [W96×H96×L118mm]
Power supply		110/220VAC 50/60Hz				
Allowable voltage range		90 to 110% of rated voltage				
Power consumption		3VA				
Display method		7Segment LED display				
Character size		W6×H10mm		W7.2×H9.8mm	W9.5×H14.2mm	
Display accuracy		F.S. ± 0.5% rdg ±1digit				
Setting type		Digital switch setting				
Setting accuracy		F.S. ±0.5%				
Sensor input		T.C(Thermocouples) : K(CA), J(IC), R(PR) / RTD : Pt100Ω				
Input line resistance		T.C(Thermocouples) : Max. 100Ω, RTD : Max. 5Ω per a wire				
Control method	ON/OFF	Hysteresis : Variable F.S. 0.2 to 3%				
	Proportional	Proportional band : Variable F.S. 1 to 10%, Period : 20sec. fixed				
Alarm output	SUB	SUB : 0 to −50℃				————
	Alarm	(※1) ALARM : F.S. 0 to 10%				
RESET adjuster range		F.S. ±3%(Only for control deviation)				
Control output		• Relay contact output : 250VAC 3A 1c • SSR output : 24VDC ±3V 20mA Max. • Current output : DC4−20mA Load 600Ω Max.				• Relay contact output : 1st out : 250VAC 3A 1c, 2nd out : 250VAC 2A 1c • SSR drive output : 24VDC ±3V 20mA Max. • Current output : DC4−20mA Load 600Ω Max.
		SUB OUT : 250VAC 1A 1a	ALARM OUT : 250VAC 1A 1a	ALARM OUT : 250VAC 1A 1a	ALARM OUT : 250VAC 1A 1c	
Self−diagnosis		Built−in burn out function				

(※1)F.S. is same with sensor measuring temperature range.
Ex)In case of using temperature is from −99 to 199℃, Full scale is 299.8.

▣Connections

※RTD(Resistance Temperature Detector) : Pt100Ω(3−wire type) ※T.C(Thermocouples) : K, J, R

●T4MA

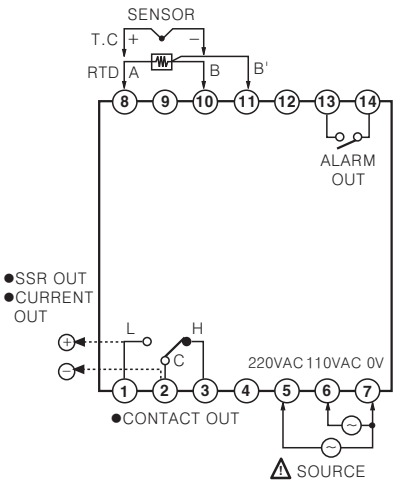

●T4LA, T4LP

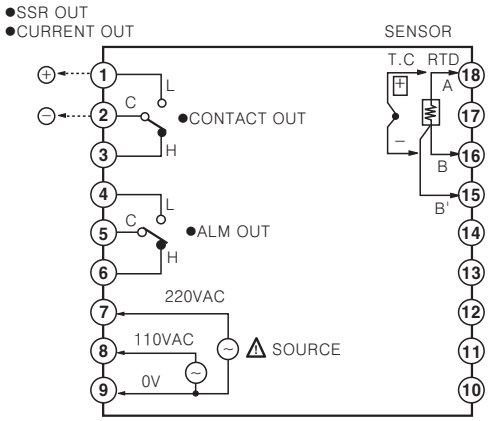

●T3HA, T3HS

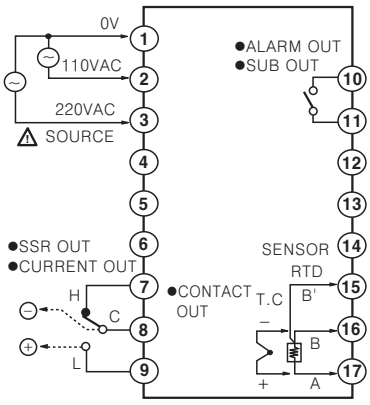

Analog and non-indicating temperature controller(TOS/TOM/TOL Series)

▣Ordering information

T O S – B 4 R P 4 C

Unit	C	Celsius(℃)
	F	Fahrenheit(℉)
Temperature range	X	0 to 60
	1	0 to 100
	2	0 to 200
	3	0 to 300
	4	0 to 400
	6	0 to 600
	8	0 to 800
	C	0 to 1200
Sensor input type	P	Pt100Ω
	J	J(IC)
	K	K(CA)
Contol output	R	Relay output
	S	SSR output
Power supply	3	110/220VAC 50/60Hz
	4	100–240VAC 50/60Hz
Control method	P	Proportional control
	F	ON/OFF control
	B	ON/OFF, Proportional control
Size	S	DIN W48×H48mm
	M	DIN W72×H72mm
	L	DIN W96×H96mm
Digit	O	Non–indicating
Item	T	Temperature controller

※Please check the range of temperature when selecting a model.

▣Specifications

Model	TOS	TOM	TOL
Appearances & Dimensions	※8pin plug in type [W48×H48×L92mm]	[W72×H72×L132mm]	[W96×H96×L116mm]
Features	Non–indicating		
Power supply	100–240VAC 50/60Hz	110/220VAC 50/60Hz	
Allowable voltage range	90 to 10% of rated voltage		
Power consumption	2.2VA	3VA	
Display method	LED ON	LED ON/OFF	
Setting type	Dial setting		
Setting accuracy	F.S. ±2%		
Sensor input	T.C(Thermocouples) : K(CA), J(IC) / RTD : Pt100Ω		
Input line resistance	T.C(Thermocouples) : Max. 100Ω, RTD : Max. 5Ω per a wire		
Control method ON/OFF	Hysteresis : F.S. 0.5 ±0.2% fixed		
Control method Proportional	Proportional band : F.S. 3% fixed, Period : 20sec. fixed		
Control output	• Relay output : 250VAC 2A 1c • SSR Output : 12VDC ±3V Load 20mA Max.	• Relay contact output : 250VAC 3A 1c • SSR Output : 12VDC ±3V 20mA Max.	
Self–diagnosis	Built–in burn out function		

▣Temperature range for each sensor

Model	TOS / TOM / TOL		
Sensor input type	Thermocouples		RTD
	J(IC)	K(CA)	Pt100Ω
Standard scale range (℃)	200℉ 100℃ 200℃ 400℉ 300℃ 600℉ 400℃ 800℉	100℃ 200℃ 300℃ 600℉ 400℃ 600℃ 800℃ 1200℃	60℃ 100℃ 200℃ 200℉ 400℃

▣Connections

※RTD(Resistance Temperature Detector) : Pt 100Ω(3–wire type), T.C(Thermocouple) : K, J, R

●TOS

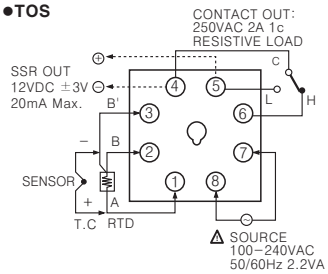

●TOM

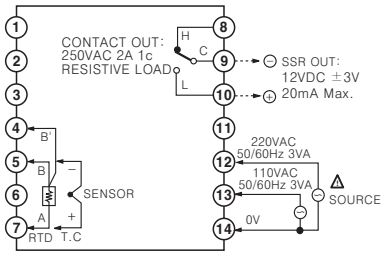

●TOL

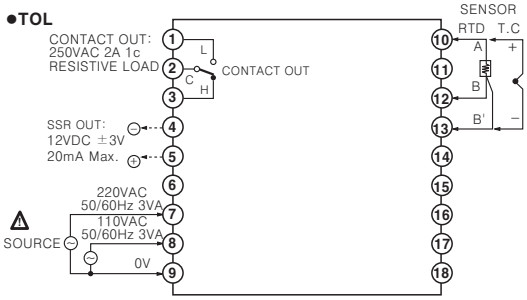

Indication only type temperature controller(T3NI/T4YI/TAWI/T3SI/T3HI/T4MI/T4LI Series)

▣Ordering information

T 3 S I – N 4 N P 4 C

Item	T	Temperature controller
Digit	3	999(3digit)
	4	9999(4digit)
Size	N	DIN W48×H24mm
	Y	DIN W72×H36mm
	W	DIN W96×H48mm
	S	DIN W48×H48mm
	H	DIN W48×H96mm
	M	DIN W72×H72mm
	L	DIN W96×H96mm
Indicator	I	Indicator(No output)
Control method	N	No control function
Power supply	X	12–24VDC
	3	110/220VAC 50/60Hz
	4	100–240VAC 50/60Hz
Control output	N	No output
Sensor input type	P	Pt100Ω
	J	J(IC)
	K	K(CA)
	R	R(PR)
Temperature range	0	–99 to 199, –99.9 to 199.9, –99.9 to 99.9
	1	0 to 99.9
	2	0 to 199
	4	0 to 399
	5	0 to 500
	8	0 to 799
	A	0 to 999
	C	0 to 1200
	F	600 to 1600
Unit	C	Celsius(℃)

※Please check the range of temperature when selecting a model.

▣Temperature range for each sensor

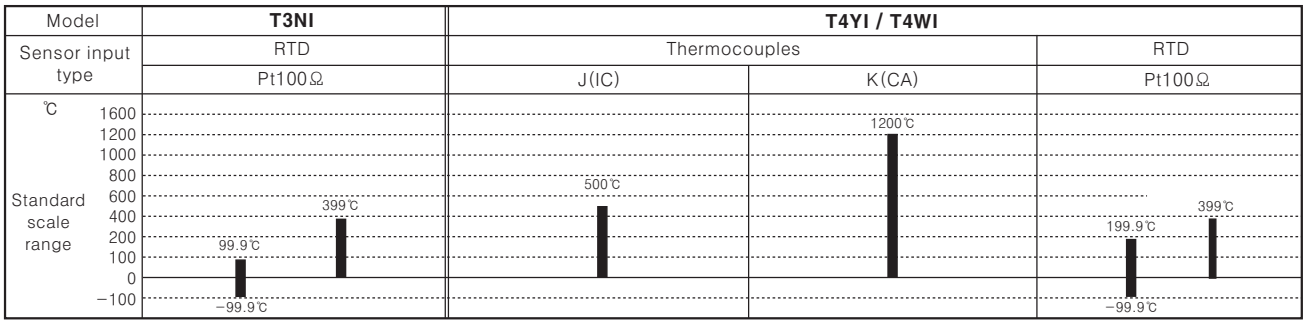

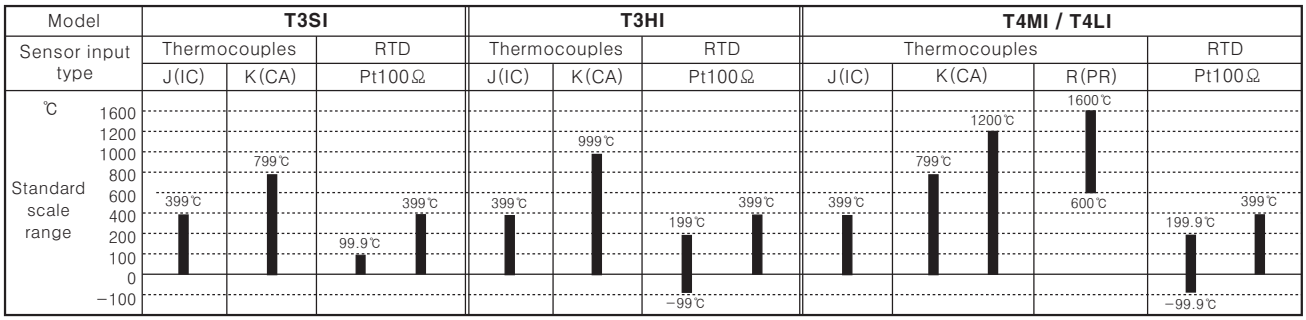

※In case input sensor is R(PR) type, it is not available to perform correct control under 600℃.

Indication only type temperature controller(T3NI/T4YI/TAWI/T3SI/T3HI/T4MI/T4LI Series)

■Specifications

Model	T3NI	T4YI	T4WI	T3SI	T3HI	T4MI	T4LI
Appearances & Dimensions	[W48×H24×L52mm]	[W72×H36×L100mm]	[W96×H48×L111.6mm]	[W48×H48×L100mm]	[W48×H96×L146mm]	[W72×H72×L125mm]	[W96×H96×L118mm]
Features	• Indicator(No output) • High accuracy • Various size						
Power supply	12-24VDC	100-240VAC 50/60Hz	110/220VAC 50/60Hz	100-240VAC 50/60Hz	110/220VAC 50/60Hz		
Allowable voltage range	90 to 110% of power supply						
Power consumption	2W	3VA					
Display method	7 Segment LED display						
Character size	W5×H8mm	W9.8×H14.2mm		W4×H8mm	W6×H10mm	W7.2×H9.8mm	W9.5×H14.2mm
Display accuracy	F.S. ± 0.3% rdg ±1digit	F.S. ±0.5% rdg ±1digit					
Sensor input	Pt100Ω	• T.C(Thermocouples): K(CA), J(IC), R(PR) • RTD : Pt100Ω					
Input line resistance	Max. 5Ω per a wire	• T.C(Thermocouples) : Max. 100Ω • RTD : Max. 5Ω per a wire					

■Connections

※RTD(Resistance Temperature Detector) : Pt 100Ω(3-wire type) ※T.C(Thermocouples) : K, J, R

●T3NI

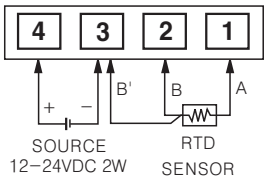

●T3YI

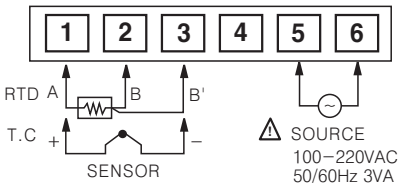

●T3WI

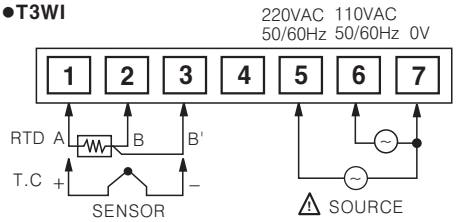

●T3SI

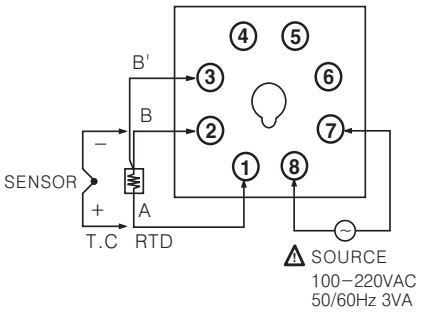

●T4MI

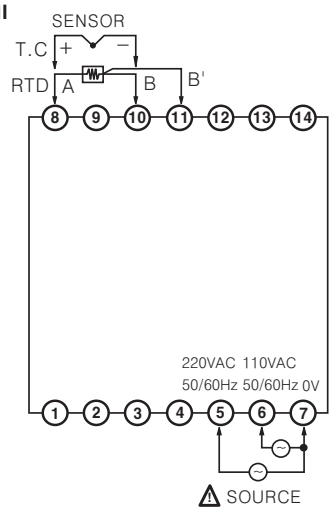

●T3HI

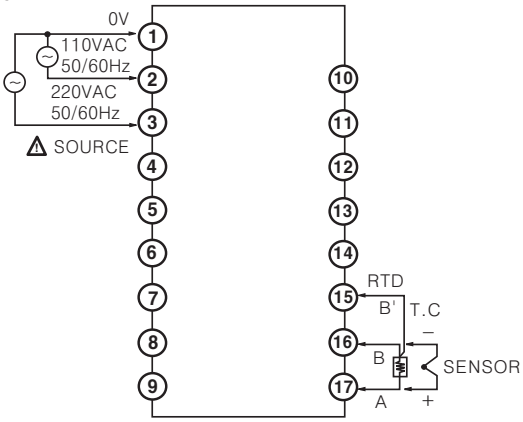

●T4LI

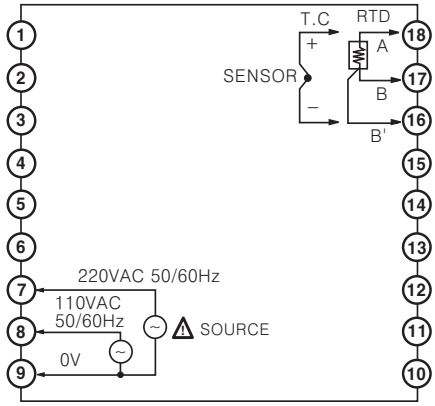

5 point input temperature indicator(T4WM Series)

▣Ordering information

T 4 W M – N 3 N P 4 C

Unit	C	Celsius(℃)
Temperature range	0	−99.9 to 199.9
	4	0 to 399
	5	0 to 500
	C	0 to 1200
Sensor input type	P	Pt100Ω
	J	J(IC)
	K	K(CA)
Control output	N	No output
Power supply	3	110/220VAC 50/60Hz
Control method	N	No control
Input	M	5 Point indicator
Size	W	DIN W96×H48mm
Digit	4	9999(4digit)
Item	T	Temperature controller

※Please check the range of temperature when selecting a model.

▣Specifications

Model	T4WM
Appearances & Dimensions	[W96×H48×L99.6mm]
Power supply	110/220VAC 50/60Hz
Allowable voltage range	90 to 110% of rated voltage
Power consumption	3VA
Display method	7 Segment LED display
Character size	W9.8×H14.2mm
Display accuracy	F · S ±0.5% rdg ±1digit
Input sensor	• T.C(Thermocouples) : K(CA), J(IC) • RTD : Pt100Ω
Input line resistance	• T.C(Thermocouples) : Max. 100Ω • RTD : Max. 5Ω per a wire
Available sensor quantity	• T.C(Thermocouples) : Max. 5pcs • RTD : Max. 5pcs

▣Front panel identification

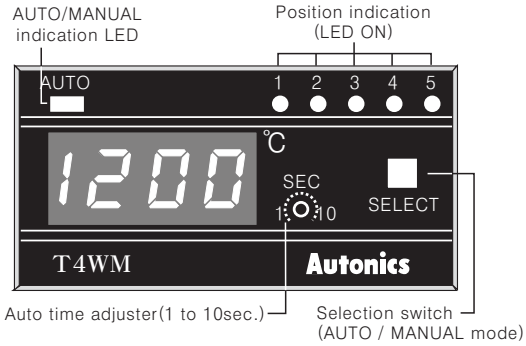

▣Connections

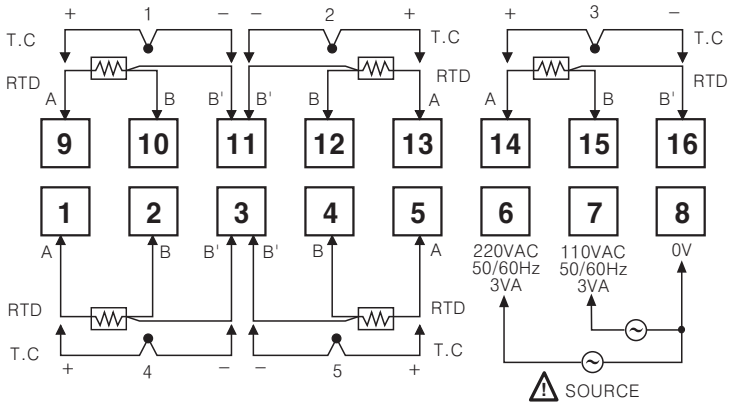

※RTD(Resistance Temperature Detector) : Pt 100Ω(3−wire type)
※T.C(Thermocouples) : K, J

▣Temperature range for each sensor

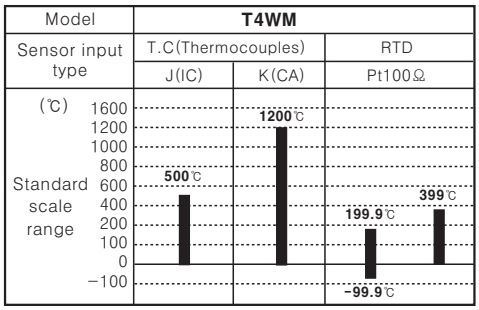

Freezing/Defrost temperature controller(TC3YF Series)

■Ordering information

TC 3 Y F − 1 4 R

Control output	R	Relay output
Power supply	4	100−240VAC 50/60Hz
Control output type	1	Compressor output
	2	Compressor+Defrost output
	3	Compressor+Defrost+Evaporation output
Control method	F	Freezing control
Size	Y	DIN W72×H36mm
Digit	3	999(3digit)
Item	TC	Temperature controller

■Specifications

Model		(※1) TC3YF-14R	TC3YF-24R	TC3YF-34R
Appearances & Dimensions		[W72×H36×L77mm]		
Power supply		100−240VAC 50/60Hz		
Allowable voltage range		90 to 110% of rated voltage		
Power consumption		4VA		
Display method		7 Segment LED display(Red)		
Indication range		NTC : −40.0 to 99.9℃(40 to 212°F), RTD : −99.9 to 99.9℃(−148 to 212°F)		
Display accuracy		[PV ±0.5% or ±1℃ Max.] rdg ±1digit		
Sampling period		0.5sec.		
Input sensor		(※2) NTC : Thermistor, RTD : DPt100Ω		
Input line resistance		Allowable line resistance is max. 5Ω		
Control method		ON/OFF control(Adjustment sensitivity 0.5 to 5.0℃, 2 to 50°F variable)		
Control output		Compressor(250VAC 5A 1a)	Compressor(250VAC 5A 1a) Defrost output(250VAC 10A 1a)	Compressor(250VAC 5A 1a) Defrost output(250VAC 10A 1a) Evaporation−fan output(250VAC 5A 1a)
Memory protection		Approx. 10 years(When using non−volatile semiconductor memory)		
Insulation resistance		Min. 100MΩ(at 500VDC megger)		
Dielectric strength		2000VAC 60Hz for 1 minute(between all external terminal and case)		
Noise strength		±2kV R−phase and S−phase(pulse width 1μs)		
Relay life cycle	COMP	Mechanical : Min. 20,000,000 times, Electrical : Min. 50,000 times(250VAC 5A resistive load)		
	DEF	Mechanical : Min. 20,000,000 times, Electrical : Min. 100,000 times(250VAC 10A resistive load)		
	FAN	Mechanical : Min. 20,000,000 times, Electrical : Min. 50,000 times(250VAC 5A resistive load)		

(※1) There is no defrost function (※2) RTD(Pt100Ω) type is customizable.

■Connections

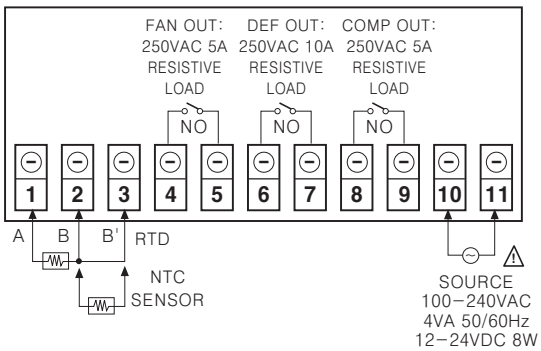

■Dimensions

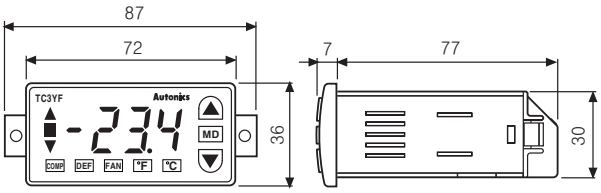

Unit : mm

■Front panel identification

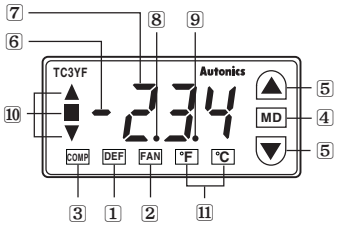

1 DEF(Defrost output lamp) : Light is ON when defrost output is ON
2 FAN(Evaporation−fan output lamp) : Light is ON when evaporation output is ON.
3 COMP(Compressor output lamp) : Light is ON when compressor output is ON.
4 MD(Mode key) : For entering, changing shifting parameters
5 ▼ ▲(Setting key:Up/Down) : For changing parameters
6 − : Displaying minus
7 FND(Display process value) : Display a current value (SV) on RUN mode. Display a parameter and a setting value when setting parameter.
8 ●(Display a decimal point) : Display a decimal point when the time unit is 'Min'
9 ●(Display a decimal point) : Display a decimal point when the temperature unit is '℃'
10 ▲, ■, ▼(Display a deviation) : Based PV on SV−▲, ▼(Red) / ■(Green)
11 ℃, °F(Temperature unit) : Selectable ℃ or °F
※When delay time is applied, the output lamp of defrost output, evaporation−fan and compressor is ON simultaneously after the lamp flickers every one second.

Simple operation type temperature controller(TC3YT Series)

▣Ordering information

TC 3 Y T – B 4 R 3

Relay capacity	3	250VAC 3A 1c
	16	250VAC 16A 1c
Control output	R	Relay output
Power supply	4	100–240VAC 50/60Hz
Control method	B	ON/OFF and proportional control(common use)
Setting type	T	Touch switch single setting type
Size	Y	DIN W72×H36mm
Digit	3	999(3digit)
Item	TC	Temperature controller

▣Specifications

Model		TC3YT-B4R3	TC3YT-B4R16
Appearances & Dimensions		[W72×H36×L77mm]	
Power supply		100–240VAC 50/60Hz	
Allowable voltage range		90 to 110% of rated voltage	
Power consumption		4VA	
Display method		7 Segment LED display(Red) [Deviation "■" signal(Green), unit display(Yellow)]	
Display accuracy		[PV ±0.5% or ±1℃ Max.] rdg ±1digit	
Sampling period		500ms	
Input type		(※1) • T.C(Thermocouples) : K(CA), J(IC) • RTD : DPt100Ω	
Control method		ON/OFF and proportional control(common use)	
Control output		Relay output 250VAC 3A 1c	Relay output 250VAC 16A 1c
Hysteresis		1 to 100℃	
Proportional band		0 to 100%	
Offset correction		0 to 100%	
Control period		1 to 20sec.	
Memory protection		Approx. 10 years(When using non-volatile semiconductor memory)	
Insulation resistance		Min. 100MΩ(at 500VDC megger)	
Dielectric strength		2000VAC 60Hz for 1 minute(between all external terminal and case)	
Noise strength		±2kV R-phase and S-phase(pulse width 1μs)	
Relay life cycle	Mechanical	Min. 10,000,000 times	
	Electrical	Min. 100,000 times (250VAC 3A resistive load)	Min. 100,000 times (250VAC 16A resistive load)

(※1) NTC sensor input is sold separately.

▣Connections

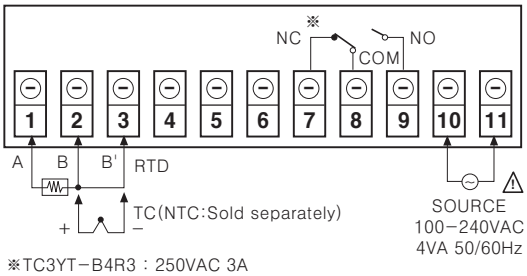

※TC3YT-B4R3 : 250VAC 3A
※TC3YT-B4R16 : 250VAC 16A

▣Front panel identification

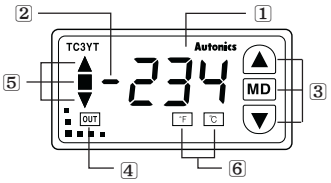

1 PV(Process value) display(Red)
2 Minus display(Red)
3 Control Keys(MD, UP, DOWN)
4 Display operation of control output(Red)
5 Display deviation between PV(Process value) and SV(Setting value) : ▲, ▼(Red) / ■(Green)
6 PV(Process value) ℃/°F unit display(Yellow)

▣Dimensions

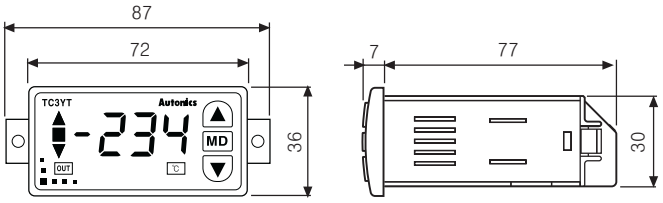

Unit : mm

Board type temperature controller(TB42 Series)

▣Ordering information

TB 4 2 – 1 4 R

Control output	R	Relay output
	S	SSR output
	C	Current output(DC4–20mA)
	N	PV transmission output(DC4–20mA)
Power supply	4	100–240VAC 50/60Hz
Sub output	1	EVENT1 output type
Display	2	Dual display type
Digit	4	9999(4digit)
Item	TB	Temperature controller board

※Transmission output type does not have EVENT1 output.

▣Specifications

Model		TB42			
Appearances & Dimensions		[Display board : W60×H60mm] [Control board : W65×H78mm]			
Features		• High quality and economical type • Convenient to install at any user's applications • Display board size can be customizable			
Power supply		100–240VAC 50/60Hz(90 to 110% of power supply)			
Power consumption		Approx. max. 5VA			
Display method		7 Segment LED display [Processing value(PV):Green, Setting value(SV):Red]			
Character size		W8×H10mm			
Input	Thermocouple(T.C)	K(CA), J(IC) [Tolerance outer resistance is max. 100Ω]			
	RTD	Pt100Ω [Allowable line resistance is max. 5Ω per a wire]			
Control output	Relay	250VAC 3A 1a	———	———	———
	SSR	———	12VDC ±3V 30mA Max.	———	———
	Current	———	———	DC4–20mA Load 600Ω Max.	———
Control method		ON/OFF and P, PI, PD, PIDF, PIDS control			
Sub output	Event	• Event1 output : Relay output(250VAC 0.5A 1a) • Event2 output : OK monitoring display by LED			
	Transmission	———	———	———	DC4–20mA, load Max. 600Ω for PV
Setting type		Front push buttons			
Display accuracy		F.S. ±0.5% rdg ±1digit based on SV or 3℃ Max.			
Hysteresis		Adjustable 1 to 100℃(0.1 to 100.0℃) at ON/OFF control			
Proportional band(P)		0.0 to 100.0%			
Integral time(I)		0 to 3600sec.			
Derivative time(D)		0 to 3600sec.			
Control cycle(T)		1 to 120sec.			
Sampling period		0.5sec.			

▣Connections

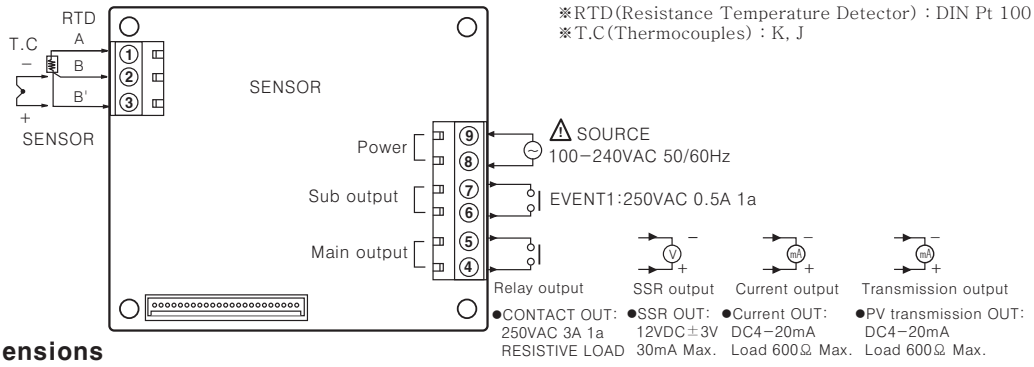

※RTD(Resistance Temperature Detector) : DIN Pt 100Ω, JIS Pt 100Ω(3–wire type)
※T.C(Thermocouples) : K, J

▣Dimensions

●Display part

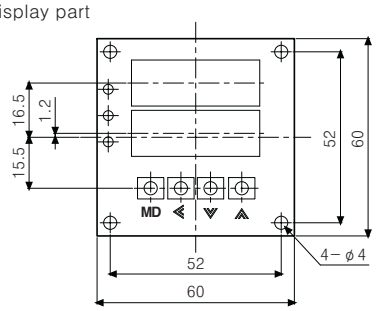

●Control part

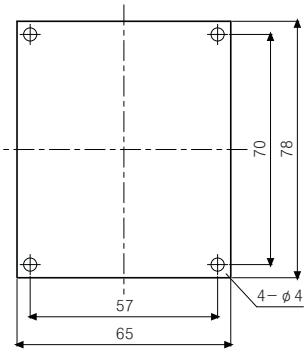

※Cable length is 300mm.
※The size of board is based on user's application.(Customizable)

Unit : mm

Temperature/humidity transducer(THD Series)

▣Ordering information

THD − D D 1 − C

Output	※ PT	Temperature sensor resistance value(PT100Ω)
	※ PT/C	Temperature sensor resistance value(PT100Ω) / Current output(DC4−20mA)
	C	Current output(DC4−20mA)
	V	Voltage output(1−5VDC)
	T	RS485 communication output(Modbus RTU)
Length of sensor pole	※ No mark	Built−in
	1	100mm
	2	200mm
Display		Non−display type
	D	Display type
Mounting	R	Room type(For indoor)
	D	Duct mounting type
	W	Wall mounting type
Item	THD	Temperature humidity double

※It is only for THD−R series.

▣Specifications

Model		THD-R-PT	THD-R-PT/C	THD-R-C	THD-R-V	THD-R-T
Appearances & Dimensions		[W60×H80×L33.5mm]				
Power supply		————	24VDC ±10%			
Power consumption		————	Max. 2.4W			
Input		Temperature (Built−in sensor)	Temperature, Humidity(Built−in sensor)			
Output	Temp.	PT100Ω resistance value		DC4−20mA	1−5VDC	RS485 communication output
	Humidity	————	DC4−20mA		1−5VDC	RS485 communication output
Measuring range	Temp.	−19.9 to 60.0℃				
	Humidity	————	0 to 99.9%RH(Be cautious of using in over 90%RH of humidity)			
Output accuracy	Temp.	Max. ±0.8℃	−19.9 to 5.0℃ : Max. ±1.0℃, 5.0 to 40.0℃ : Max. ±0.5℃, 40.0 to 60.0℃ : Max. 1.0℃			
	Humidity	————	30 to 70%RH to Max. ±3%RH(at 25 to 45℃)			
Sampling period		————	fixed 0.5sec.			

Model		THD-D□-C THD-DD□-C THD-W□-C THD-WD□-C	THD-D□-V THD-DD□-V THD-W□-V THD-WD□-V	THD-D□-T THD-DD□-T THD-W□-T THD-WD□-T
Appearances & Dimensions		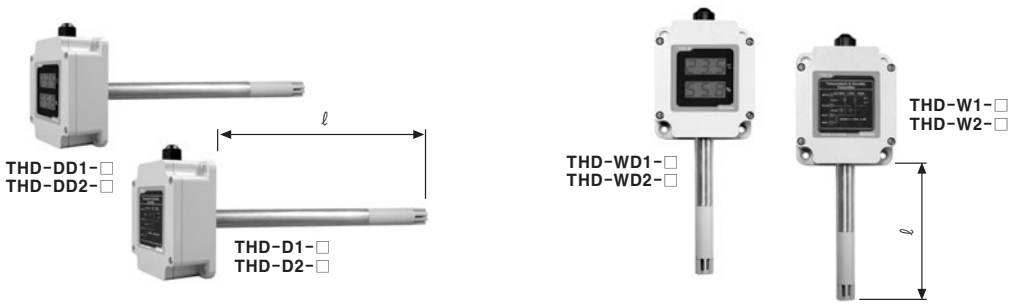 [W72×H85mm] ※Length of sensing head(ℓ) ☞ **1**:100mm, **2**:200mm		
Power supply		24VDC ±10%		
Power consumption		Max. 2.4W		
Input		Temperature, Humidity(Built−in sensor)		
Output	Temp.	DC4−20mA	1−5VDC	RS485 communication output
	Humidity	DC4−20mA	1−5VDC	RS485 communication output
Measuring range	Temp.	−19.9 to 60.0℃		
	Humidity	0.0 to 99.9%RH		
Output accuracy	Temp.	−19.9 to 5.0℃ : Max. ±1.0℃, 5.0 to 40.0℃ : Max. ±0.5℃, 40.0 to 60.0℃ : Max. 1.0℃		
	Humidity	30 to 70%RH to Max. ±3%RH(at 25 to 45℃)		
Sampling period		fixed 0.5sec.		

Temperature/humidity transducer(THD Series)

▣Dimensions

●THD-R-□, THD-R-RT, THD-R-RT/C ●THD-D□-□, THD-DD□-□ ●THD-W□-□, THD-WD□-□

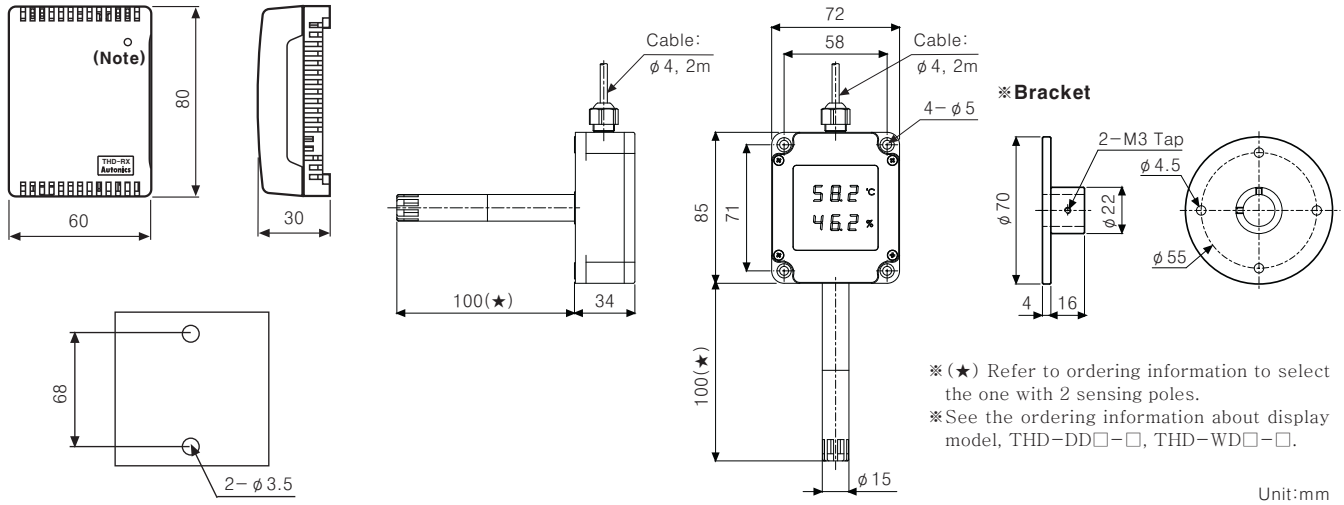

※(★) Refer to ordering information to select the one with 2 sensing poles.
※See the ordering information about display model, THD-DD□-□, THD-WD□-□.

Unit:mm

▣Connections

◎THD-R Series

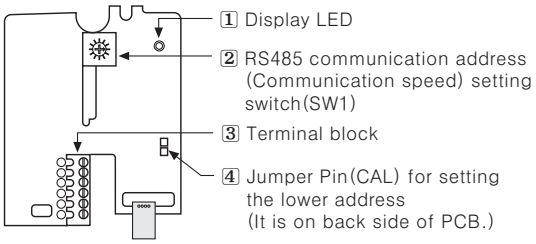

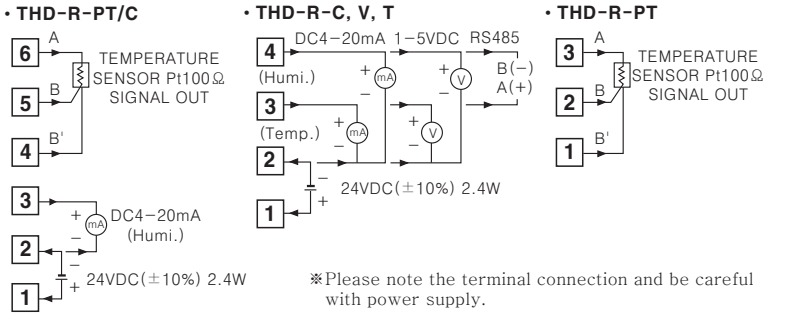

※Please note the terminal connection and be careful with power supply.

◎THD-D, THD-DD, THD-W, THD-WD Series

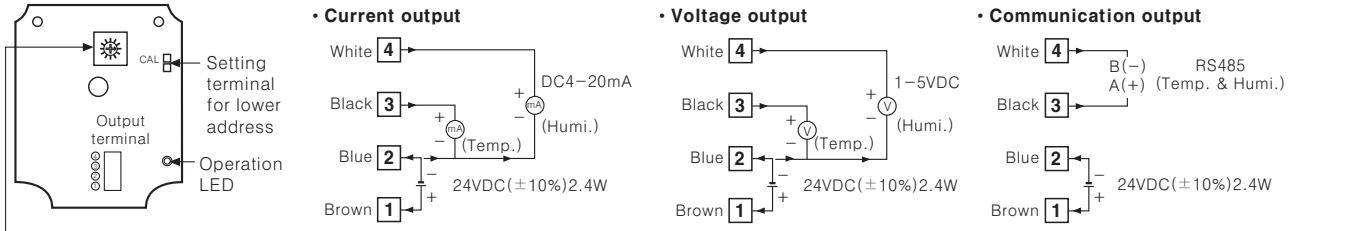

※Seperate the case cover only in case of setting communication, the unit code, communication speed with operation of the communication setting switch.

▣Case detachment

●THD-R Series

Unscrew the bolt on the bottom of product and separate the case.

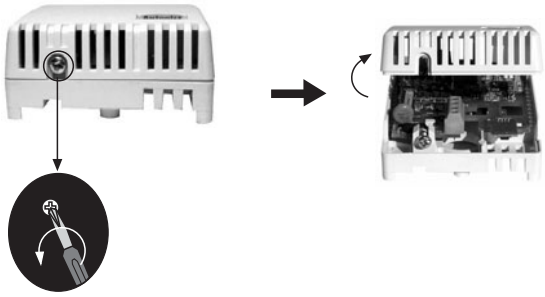

●THD-D, THD-DD, THD-W, THD-WD Series

Unscrew 4 bolts on the top of product and separate the case.

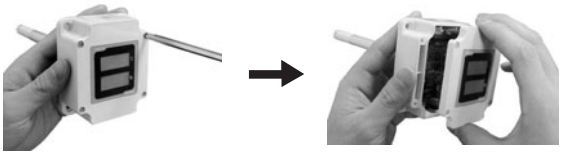

Single phase, Intergrated heatsink type SSR(SRH1 Series)

▣Ordering information

SRH 1 - 1 4 60 R

Function	No mark	Zero cross turn-on
	R	Random turn-on
Rated load current (Resistive load)	15	15A
	20	20A
	30	30A
	40	40A
	60	60A
Load voltage(Rated)	2	24-240VAC
	4	48-480VAC
Input voltage(Rated)	1	4-30VDC
	2	24VAC
	4	90-240VAC
Control phase	1	Single phase
Item	SRH	Solid state relay(Integrated heatsink type)

▣Specifications

Model	SRH1 Series
Appearances & Dimensions	●15A/20A Rated load current [W22.5×H100×L100.5mm] ●30A/40A Rated load current [W45×H100×L100.5mm] ●60A Rated load current NEW [W110×H100×L100.5mm]

Model	Input voltage	Rated load current	Load voltage	Operation mode
SRH1-1215	4-30VDC	15A	24-240VAC	Zero cross turn-on
SRH1-2215	24VAC			
SRH1-4215	90-240VAC			
SRH1-1220	4-30VDC	20A		
SRH1-2220	24VAC			
SRH1-4220	90-240VAC			
SRH1-1230	4-30VDC	30A		
SRH1-2230	24VAC			
SRH1-4230	90-240VAC			
SRH1-1240	4-30VDC	40A		
SRH1-2240	24VAC			
SRH1-4240	90-240VAC			
SRH1-1260	4-30VDC	60A		
SRH1-2260	24VAC			
SRH1-4260	90-240VAC			

Model	Input voltage	Rated load current	Load voltage	Operation mode
SRH1-1420	4-30VDC	20A	48-480VAC	Zero cross turn-on
SRH1-1420R				Random turn-on
SRH1-2420	24VAC			Zero cross turn-on
SRH1-1430	4-30VDC	30A		Zero cross turn-on
SRH1-1430R				Random turn-on
SRH1-2430	24VAC			Zero cross turn-on
SRH1-1460	4-30VDC	60A		Zero cross turn-on
SRH1-1460R				Random turn-on
SRH1-2460	24VAC			Zero cross turn-on

▣Connections

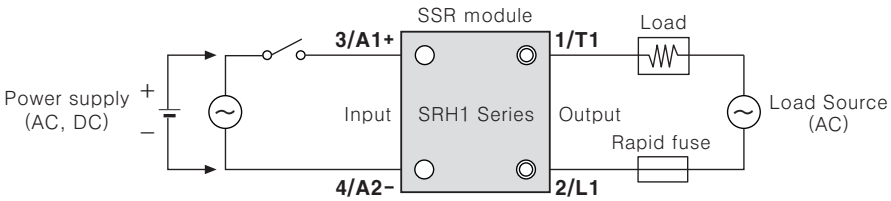

Solid-state power controller(SPC1 Series)

▣Ordering information

SPC 1 – 35

Rated current	35	35A
	50	50A
Control phase	1	Single phase
Item	SPC	Solid-state power controller

▣Specifications

Model	SPC1-35	SPC1-50
Appearances & Dimensions	[W94.6×H124.8×L92mm]	
Power supply	220VAC 50/60Hz	
Allowable operating voltage	90 to 110% of rated voltage	
Maximum rated current	35A	50A
Control power	220VAC	
Control range	Phase control : 0 to 98%, Cycle control : 0 to 100%	
Application load	Resistance load(Min. load:over 5% of rated current)	
Control input	• 1-5VDC • DC4-20mA(250Ω) • ON/OFF(External relay contact) • External adjuster(1kΩ) • Output limit input(Inner adjuster) • External 24VDC	
Control mode	Phase control	
	Cycle control(Zero cross)- Period 0.5sec., 2.0sec., 10sec. selectable	
	ON/OFF control(Zero cross)	
Starting type	Soft start(0 to 50 sec. variable)-Only for phase control and cycle control	
Display	Output indication LED	

▣Front panel identification

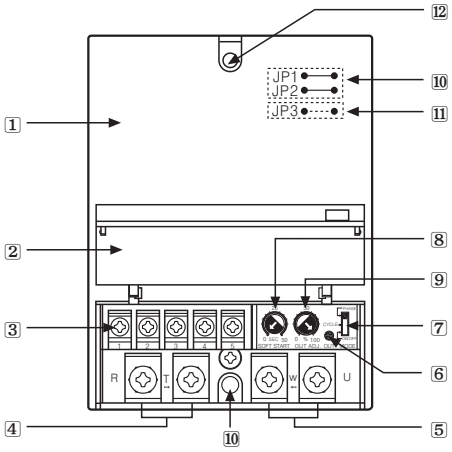

1 Case
2 Terminal block cover
3 Terminal block for control input
4 Terminal block of the power
5 Terminal block for load connection
6 LED display for output
7 Selection S/W of control mode
8 SOFT START adjusting volume
9 OUT ADJ. volume
10 Selection jumper of control period
11 Selection jumper of control type
12 The hole for fixing on panel (Bolt size:M4×50mm)

▣Connections

●External connection

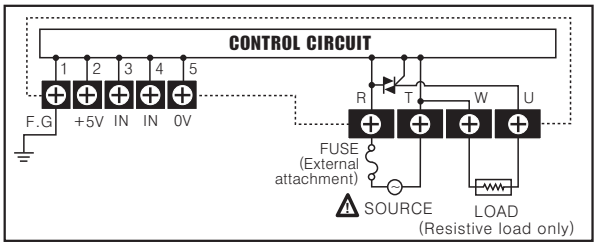

- **DC4-20mA control input** (※It is not available in ON/OFF control mode.)
  It controls 0 to 100% when you apply DC4-20mA on ④, ⑤ terminals when power is applied.
- **1-5VDC control input** (※It is not available in ON/OFF control mode.)
  It controls 0 to 100% when you apply 1 to 5VDC on ③, ⑤ terminals when power is applied.
- **ON/OFF external contact control input**
  It controls 100% if you connect External S/W or relay contact to ②, ③ terminal when it is ON, it controls 0% when it is OFF.
- **External adjuster control input** (※It is not available in ON/OFF control mode.)
  After power is applied, connecting the external volume 1kΩ to ②, ③ and ④ terminals and turning VR control from 0% to 100%. It is available to control as OUT ADJ, adjuster for the ablove 1), 2), 3) and set at 100% when it is not used.
- **External 24VDC control input**
  (※It is available for all control modes. OUT ADJ and SOFT START function are not available in ON/OFF control mode.)
  It can be used with external 24VDC voltage as below.
  It is available to control of ON/OFF, outputs 100% for applying 24VDC and 0% for applying 0VDC.

●Connection of control input terminals

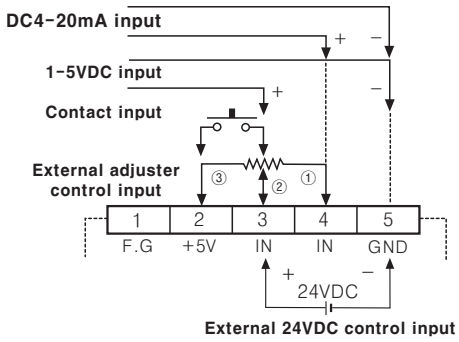

Sensor type & RTD

▣Specifications

Model		TW - V
Appearance & dimension		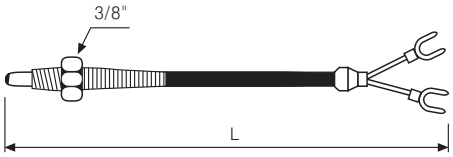
1	Type	CA, IC, PT100Ω
2	Sensing head length (L)	Standard: 1.5m, Option:?
3	Screw Spec.	Standard: 3.8", Option:?
4	Ordering Example	TW-V(CA) 3/8" ×1.5M

Model		TW - R	TW - E
Appearances & dimensions		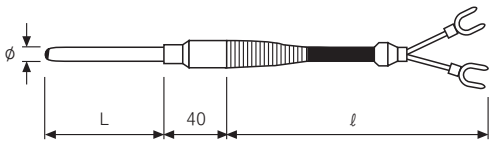	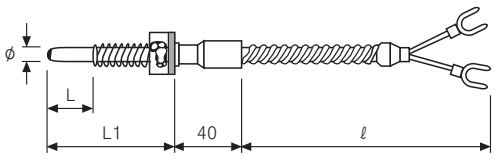
1	Type	CA, IC, PT100Ω	CA, IC, PT100Ω
2	Sensing head length (L)	Standard: 300mm, Option: ?	Standard: 50mm, Option: ?
3	Head Length (L1)	———	Standard: 150mm, Option: ?
4	Sensing head diameter(ϕ)	Standard : 4.8ϕ, Option : ?	Standard: 4.8ϕ, Option: ?
5	Compensating wire length(ℓ)	Standard: 1.5m, Option: ?	Standard: 1.5m, Option: ?
6	Ordering Example	TW-R(CA) 4.8×300mm×1.5M	TW-E(CA) 4.8×100×150mm×1.5M

Model		TW - S	TW - N
Appearances & dimensions		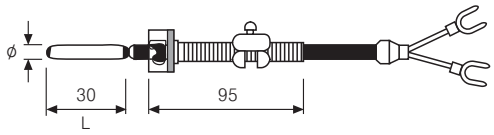	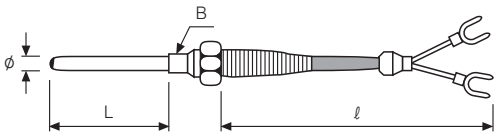
1	Type	CA, IC, PT100Ω	CA, IC, PT100Ω
2	Sensing head length (L)	Standard: 30mm, Option: ?	Standard: 30mm, Option: ?
3	Sensing head diameter(ϕ)	Standard: 4.8ϕ, Option: ?	3.2/4.8/6.4 ϕ
4	Compensating wire length(ℓ)	Standard: 1.5M, Option: ?	Standard: 1.5M, Option: ?
5	Screw Spec.	———	Standard: 1/8", 3/8", 1/2" **(※1)**
6	Ordering Example	TW-S(CA) 4.8×30mm×1.5M	TW-N(CA) 4.8×30mm×1.5M×1/8"

Model		TH - L
Appearances & dimensions		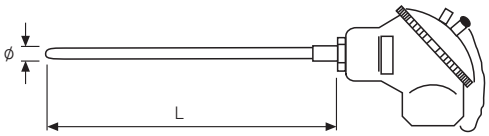
1	Type	CA, IC, PT100Ω
2	Sensing Head Length (L)	Standard: 300mm, Option: ?
3	Sensing head diameter(ϕ)	Standard: 6.4 ϕ, Option: ?
4	Ordering Example	TH-L(CA) 6.4×300mm

Model		TH - M
Appearances & dimensions		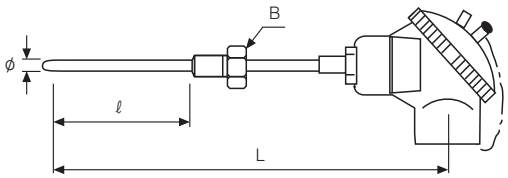
1	Type	CA, IC, PT100Ω
2	Sensing Head Length(ℓ)	Standard: 300mm, Option: ?
3	Sensing head diameter(ϕ)	3.2/4.8/6.4 ϕ
4	Total Head Length (L)	Standard: 400mm, Option: ?
5	Screw Spec.	Standard: 1/8", 3/8", 1/2" **(※1)**
6	Ordering Example	TH-M(CA) 8×300mm×400mm×PT3/8"

(※1) In case of 6.4 ϕ, 1/8" is not allowed to select as an option.

Sensor type & RTD

▣Sensor type connector

Model	DY - 1000 -1	DY - 1000 -2	DY - 2000 -1	DY - 2000 -2
Appearances	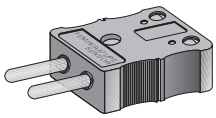	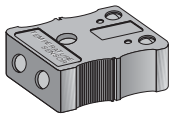	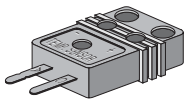	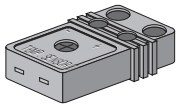
Sensor type	CA, IC, CC, CRC		CA, IC, CC, CRC	
Dimensions	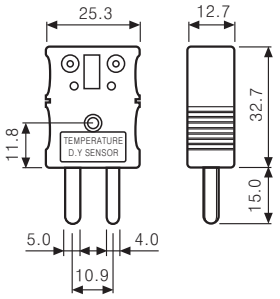	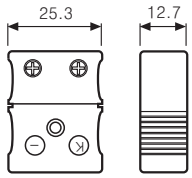	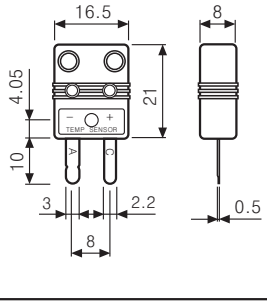	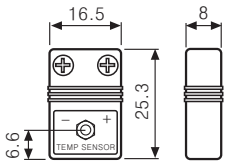

▣Sensor type connector cable

Model	DY - 2100
Appearances	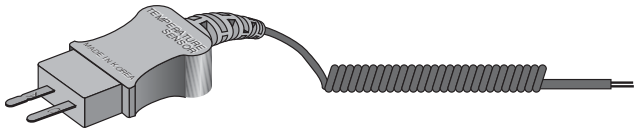
Sensor type	CA, IC, CC, CRC
Dimensions	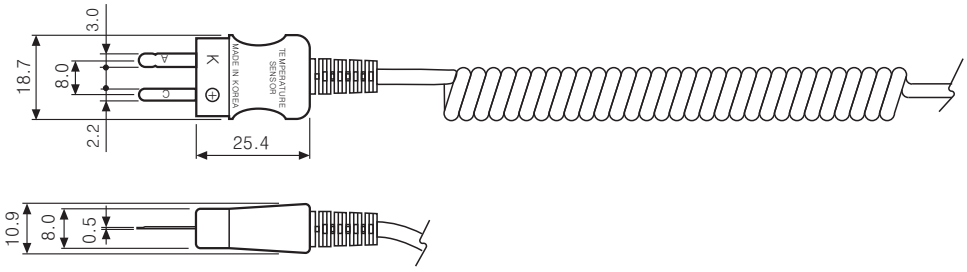

LCD counter(LA8N Series)

▣Ordering information

LA 8 N – B F

Input type	F	Free voltage input
	N	No-voltage(Small signal) input
Power supply	B	Internal lithium battery
Size	N	DIN W48×H24mm
Digit	8	99999999(8digit)
Item	LA	LCD counter

▣Specifications

Model	LA8N-BN	LA8N-BF
Digit	8	
Appearances & Dimensions	CE c UL us [W48×H24×L54mm]	
Display	LCD zero blanking type(Height : 8.7mm)	
Operation method	Count up mode	
Power supply	Internal lithium battery	
Input type	No-voltage input	Universal voltage input
Counting speed	Selectable 1cps / 30cps / 1kcps	20cps fixed
Count input	Residual voltage : Max. 0.5VDC Impedance at short-circuit : Max. 10kΩ(ON) Impedance at open-circuit : Min. 750kΩ(OFF)	High : 24-240VAC / 6-240VDC Low : 0-2VAC / 0-2.4VDC
Reset input	No-voltage input	
Min.signal width of Reset	Min. 20ms	
Battery life cycle	Over 7 years(Approx. 20℃)	
External switch	SW1(※1), SW2(※2)	SW1(※★1)
Insulation resistance	Min. 100MΩ(at 500VDC megger)	
Dielectric strength	(※3) 2000VAC 60Hz for 1 minute	

(※1) SW1 is a switch for front RESET key setting.
(※2) SW2 is a switch for counting speed setting.
(※3) No-voltage input: Between all terminals and case, Universal voltage input: Between input terminal and reset input terminal, all terminals and case

▣Connections

●No-voltage input

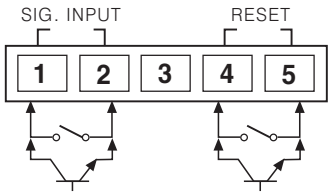

※Use reliable contacts enough to flow 5μA of current.
※Terminal 2 and 5 are connected inside.(Non-isolation)

●Free voltage input

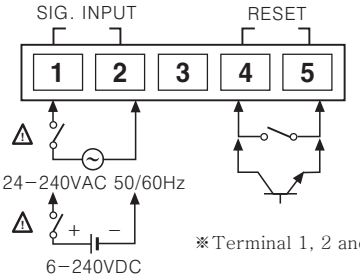

※Terminal 1, 2 and 4, 5 are isolated.

▣Dimensions

●Bracket

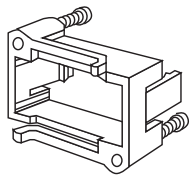

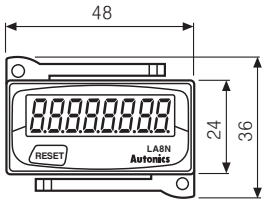

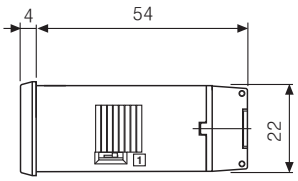

●Panel cut-out

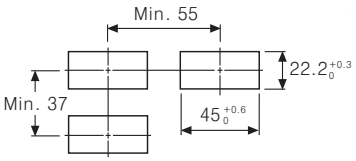

Unit:mm

Programmable counter/timer(CTS/CTY/CTM Series)

▣Ordering information

CT 6 M – 2P 4 T

Communication	No mark	None
	T	RS485
Power supply	4	100–240VAC 50/60Hz
	2	24VAC 50/60Hz / 24–48VDC
Output	2P	Dual preset
	1P	Single preset
	I	Indicator
Size	S	DIN W48×H48mm
	Y	DIN W72×H36mm
	M	DIN W72×H72mm
Digit	4	9999(4digit)
	6	999999(6digit)
Item	CT	Counter/Timer

※4digit type does not exist in the indicator type.

▣Specifications

Series		CTS SERIES		CTY SERIES	CTM SERIES
Digit		4	6	6	6
Model	Dual Preset	**CT4S-2P□□**	**CT6S-2P□□**	**CT6Y-2P□□**	**CT6M-2P□□**
	Single Preset	**CT4S-1P□□**	**CT6S-1P□□**	**CT6Y-1P□□**	**CT6M-1P□□**
	Indicator	–	**CT6S-I□□**	**CT6Y-I□□**	**CT6M-I□□**
Appearances & Dimensions		Upgrade [W48×H48×L90mm]		Upgrade [W72×H36×L77mm]	Upgrade [W72×H72×L85mm]
Digit Size	Count value	11mm	10mm	10mm	13mm
	Preset value	8mm	7mm	7mm	9mm
Power Supply	AC Power	100–240VAC 50/60Hz			
	AC/DC Power	24VAC 50/60Hz / 24–48VDC			
Allowable voltage range		90 to 110% of rated voltage(AC Power type)			
Power consum–ption	AC Power	Max. 12VA			
	AC/DC Power	AC : Max. 10VA / DC : Max. 8W			
Max. counting speed		Selectable 1cps, 30cps, 1kcps, 5kcps, or 10kcps			
Min. input signal width	Counter	Reset input : Selectable 1ms or 20ms			
	Timer	INA, INB, RESET : Selectable 1ms or 20ms			INA, INB, RESET, INHIBIT, BATCH RESET: Selectable 1ms or 20ms
Input		Selectable voltage input or No–voltage input –Voltage input : input impedance is 5.4kΩ, 'H' level : 5–30VDC, 'L' level : 0–2VDC –No–voltage input: short–circuit impedance : Max. 1kΩ, Residual voltage : Max. 2VDC			
One–shot output		Selectable 0.01s to 99.99s			
Control output	Without com. / Contact output	Dual preset : SPST(1a) 2EA Single preset : SPDT(1c) 1EA		Dual preset : SPST(1a) 1EA, SPDT(1c) 1EA Single preset : SPDT(1c) 1EA	
	Without com. / Solid state output	Dual preset : 1NPN open collector Single preset : 1NPN open collector			Dual preset:3NPN open collector Single preset:2NPN open collector
	Com. / Contact output	Dual preset : SPST(1a)2EA Single preset : SPDT(1c)1EA			Dual preset: SPST(1a), SPDT(1c) Single preset: SPDT(1c)
	Com. / Solid state output	—		Dual preset: – Single preset:1NPN open collector	Dual preset:2NPN open collector Single preset:2NPN open collector
	Capacity / Contact output	250VAC 5A resistive load		250VAC 3A resistive load	250VAC 5A resistive load
	Capacity / Solid state output	30VDC Max. 100mA Max.			
External sensor power		12VDC ±10%, 100mA Max.			
Memory retention		10years(When using non–volatile semiconductor memory type)			
Timer accuracy		Repeat error, Set error, voltage error, Temperature error – Power ON Start: Max. ±0.01% ±0.05 sec. – Signal Start: Max. ±0.01% ±0.03 sec.			

Programmable counter/timer(CTS/CTY/CTM Series)

▣Connections

⚠ **Be careful that connections are different between communication model and non-communication model when wiring.**

◎CT□S-2P□

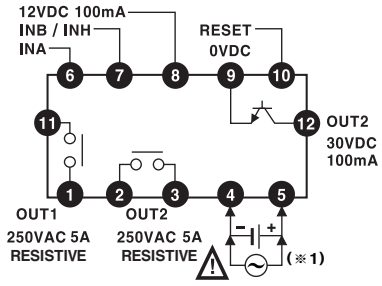

◎CT□S-2P□T

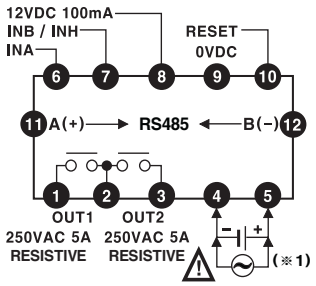

◎CT□S-1P□

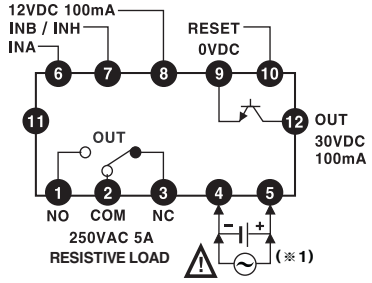

◎CT□S-1P□T

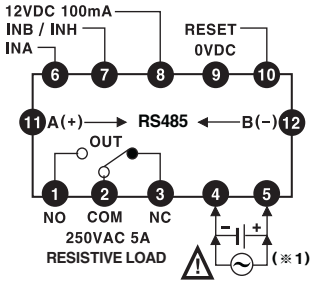

◎CT6S-I□

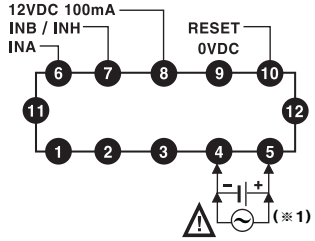

◎CT6S-I□T

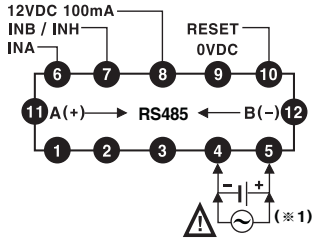

◎CT6Y-2P□

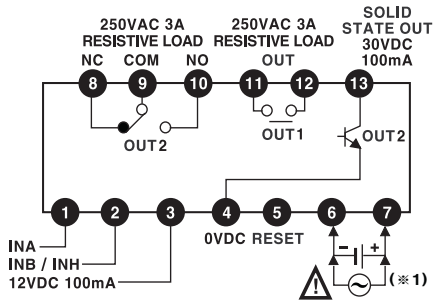

◎CT6Y-2P□T

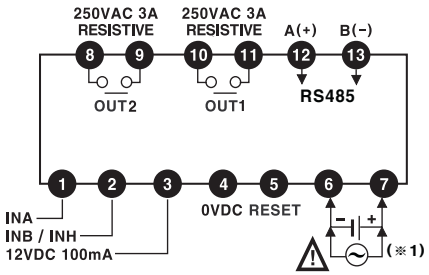

◎CT6Y-1P□

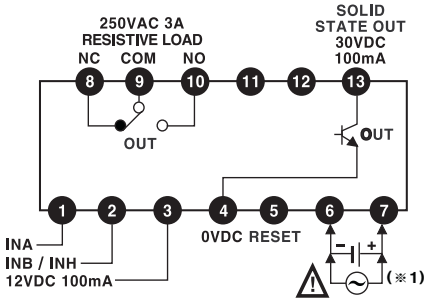

◎CT6Y-1P□T

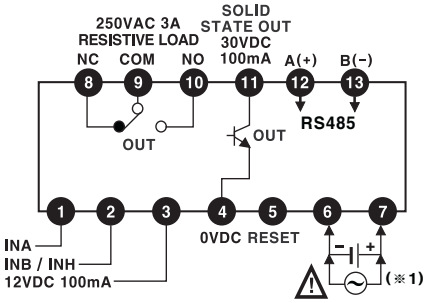

(※1) Source
- AC Power: 100-240VAC 50/60Hz
- AC/DC Power: 24-48VDC, 24VAC 50/60Hz

(※2)INHIBIT Signal
- Counter operation: If INHIBIT signal is applied, count input will be prohibited.
- Timer operation: If INHIBIT signal is applied, time progressing will stop.(HOLD)

Programmable counter/timer(CTS/CTY/CTM Series)

▣Connections

⚠ **Be careful that connections are different between communication model and non-communication model when wiring.**

◎CT6Y-I□

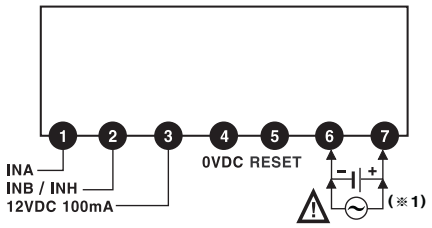

◎CT6Y-I□T

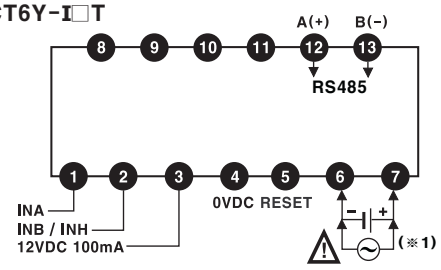

◎CT6M-2P□

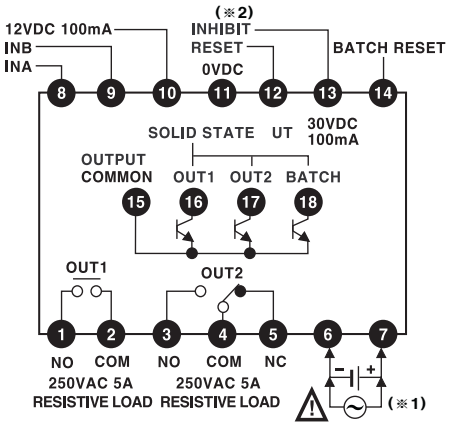

◎CT6M-2P□T

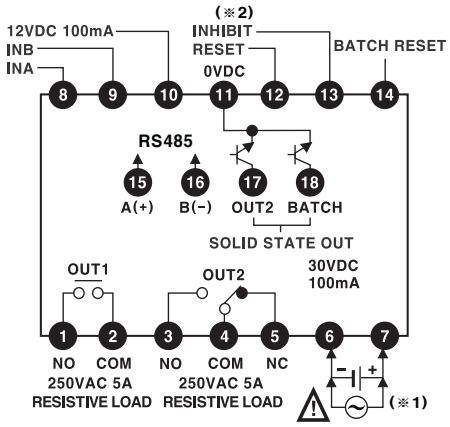

◎CT6M-1P□

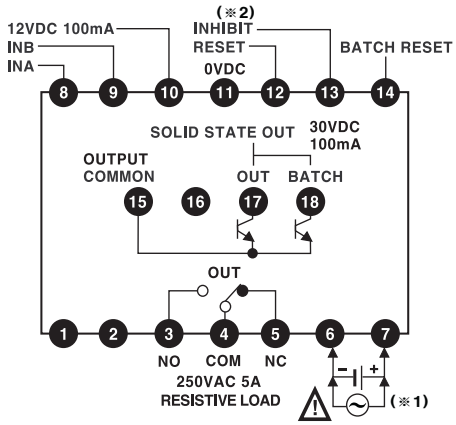

◎CT6M-1P□T

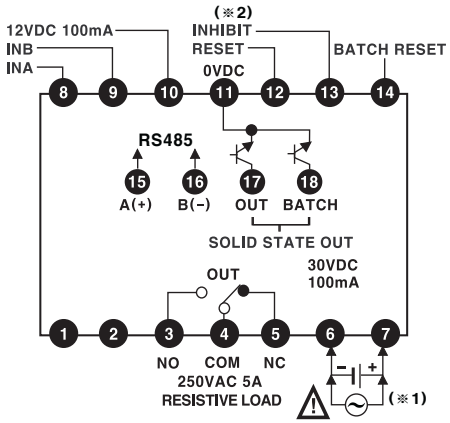

◎CT6M-I□

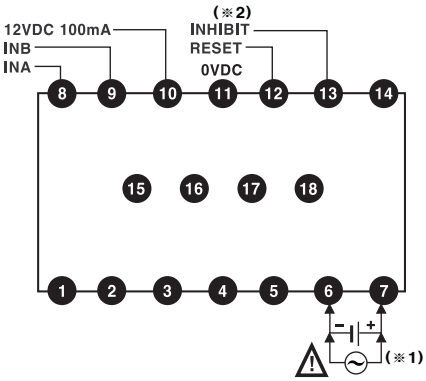

◎CT6M-I□T

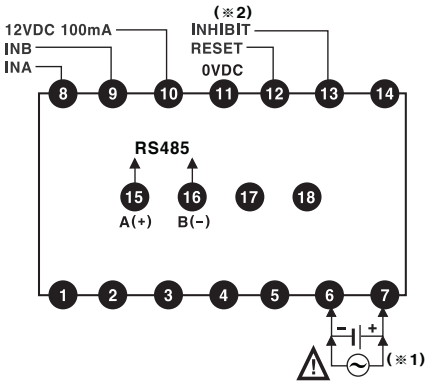

(※1) Source
- AC Power: 100-240VAC 50/60Hz
- AC/DC Power: 24-48VDC, 24VAC 50/60Hz

(※2) INHIBIT Signal
- Counter operation: If INHIBIT signal is applied, count input will be prohibited.
- Timer operation: If INHIBIT signal is applied, time progressing will stop.(HOLD)

Up/down counter/timer(FX Series)

▣Ordering information

FX 4 □ − □

Output	I	Indicator(No output)
	No mark	Single preset
	2P	Dual preset
Size	No mark	DIN W72×H72mm
	H	DIN W48×H96mm
	L	DIN W144×H72mm
Digit	4	9999(4digit)
	6	999999(6digit)
Item	FX	Counter/Timer

FX 4 S − □

Output	I	Indicator(No output)
	No mark	Single preset
Size	Y	DIN W72×H36mm
	S	DIN W48×H48mm
Digit	4	9999(4digit)
	5	99999(5digit)
	6	999999(6digit)
Item	FX	Counter/Timer

▣Specifications

Series			FX Series							
Digit			4	6	4	5	4	6	4	4	6
Model	Single preset		——	——	FX4S	——	FX4	FX6	FX4H	——	——
	Dual preset		——	——	——	——	FX4-2P	FX6-2P	FX4H-2P	FX4L-2P	FX6L-2P
	Totalizer(Indicator)		FX4Y-I	FX6Y-I	——	FX5S-I	FX4-I	FX6-I	FX4H-I	FX4L-I	FX6L-I
Appearances & Dimensions			[W72×H36×L93mm]		[W48×H48×L91mm]		[W72×H72×L113mm]		[W48×H96×L100mm]	[W144×H72×L112mm]	
Input operation mode			Count up/down input(Command input, Individual input, Phase difference input), Count up input, Count down input								
Power supply			100−240VAC 50/60Hz, 12−24VAC/DC(Option) [90 to 110% of rated voltage]								
Max. counting speed			Selectable 1cps/30cps/2kcps/5kcps by internal DIP switch								
Input	CP1, CP2 input		No voltage input ☞ Impedance at short−circuit : Max. 470Ω Residual voltage at short−circuit : Max. 1VDC Impedance at open−circuit : Min. 100kΩ		●Voltage input, No voltage input (PNP, NPN selectable) [Voltage input] Input impedance : 5.4kΩ, "H" level : 5−30VDC, "L" level : 0−2VDC [No voltage input] Impedance at short−circuit impedance : Max. 1kΩ, Residual voltage at short−circuit: Max. 2VDC, Impedance at open−circuit : Min. 100kΩ						
	Reset input										
Control output	Contact	Type	——		SPDT(1c)	——	Single preset type : SPDT(1c), Dual preset type : 1st output SPDT(1c), 2nd output : SPDT(1c)				
		Capacity			250VAC 3A resistive load		250VAC 3A at resistive load				
	Solid−state	Type	——		NPN open collector	——	Single preset type : NPN open collector, Dual preset type : 1st output NPN open collector, 2nd output NPN open collector				
		Capacity			30VDC max. 100mA max.		30VDC Max. 100mA Max.				

▣Connections

●FX4Y-I(No output)
●FX6Y-I(No output)

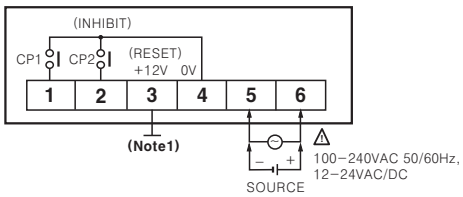

(Note 1) : It can be selected RESET or sensor power (+12V 50mA) by internal PIN operation.

●FX4S
●FX5S-I(No output)

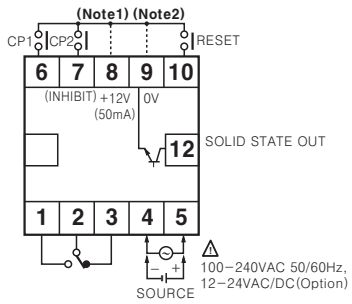

●FX4(No out1) / FX6(No out1)
●FX4-2P / FX6-2P
●FX4-I(No output) / FX6-I(No output)

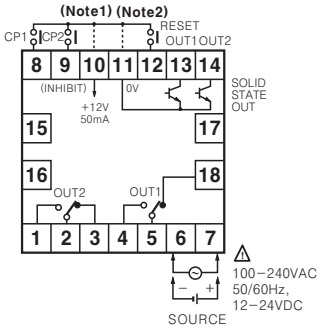

●FX4H(No out1)
●FX4H-2P
●FX4H-I(No output)

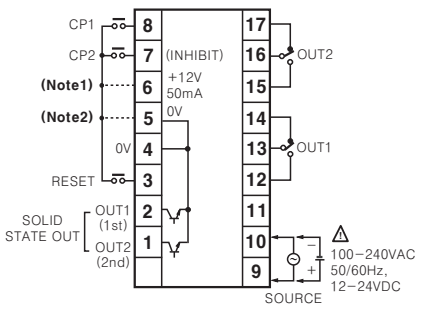

●FX4L-2P / FX6L-2P
●FX4L-I(No output) / FX6L-I(No output)

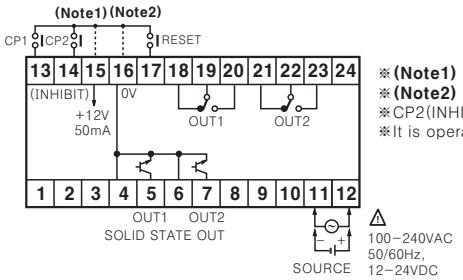

※**(Note1)** : Connection for PNP input
※**(Note2)** : Connection for NPN input
※CP2(INHIBIT) : Time Hold terminal when using for timer.
※It is operated by power ON start type when used for timer.

Counter(FS, F/L, FM/LM Series)

▣Ordering information

FS 4 A

Output	A	Single preset
	B	Indicator(No output)
Digit	4	9999(4digit)
	5	99999(5digit)
Size	FS	DIN W48×H48mm

F 4 A M − 2P

Output	No mark	Single preset
	2P	Dual preset
Function	M	Measuring function
Output	A	Preset
	B	Indicator(No output)
Digit	4	9999(4digit)
	6	999999(6digit)
Size	F	DIN W72×H72mm
	L	DIN W144×H72mm

▣Specifications

Series			Standard type counter				Measure counter			
			FS Series		F Series	L Series	FM Series		LM Series	
Digit			4	5	8	8	4	6	4	6
Model	Single preset		FS4A	———	F8A	L8A	F4AM	F6AM	———	———
	Dual preset		———	———	———	———	F4AM-2P	F6AM-2P	L4AM-2P	L6AM-2P
	Totalizer (Indicator)		———	FS5B	F8B	L8B	F4BM	F6BM	L4BM	L6BM
Appearances & Dimensions			[W48×H48×L85mm]		[W72×H72×L113mm]	[W144×H72×L112mm]	[W72×H72×L112mm]		[W144×H72×L112mm]	
Input operation mode			Count up, Count down input		Count up input, Count down input, Count up/down input					
Power supply			100−240VAC 50/60Hz, 12−24VAC/DC(Option) [90 to 110% of rated voltage]							
Max. counting speed			Selectable 1cps/30cps/2kcps/5kcps by internal DIP switch							
Input	Count input (CP1, CP2 input)		[No voltage input] • Residual voltage at short−circuit : Max. 1VDC • Impedance at short−circuit : Max. 470kΩ • Impedance at open−circuit : Min. 100kΩ		• Voltage input, No voltage input(PNP, NPN selectable) [Voltage input] Input impedance : 5.4kΩ, "H" level : 5−30VDC, "L" level : 0−2VDC [No voltage input] Impedance at short−circuit : Max. 1kΩ, Residual voltage at short−circuit : Max. 2VDC, Impedance at open−circuit : Min. 100kΩ					
	Reset input									
Control output	Contact	Type	SPST(1a)	———	SPDT(1c)		Single preset type:SPDT(1c) Dual preset type: 1st output:SPST(1a), 2nd output:SPST(1a)		Dual preset type: 1st output:SPDT(1c), 2nd output:SPDT(1c)	
		Capacity	250VAC 3A resistive load	———	250VAC 3A resistive load					
	Solid−state	Type	———		NPN open collector		Single preset type : NPN open collector Dual preset type : 1st output NPN open collector, 2nd output NPN open collector			
		Capacity	———		30VDC 100mA Max.					
One shot output time			0.05 to 5sec.				Single preset type : 0.5sec., Dual preset type : 0.05 to 5sec.			
Memory protection			10 years(When using nonvolatile semiconductor memory)							

▣Connections

●FS4A / FS5B(No output)

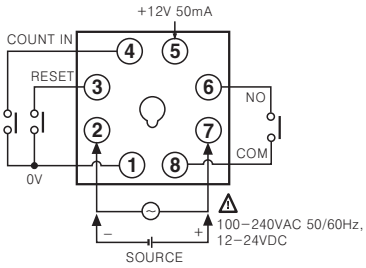

●F8A / F8B(No output)

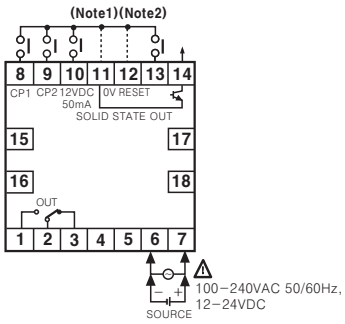

●L8A / L8B(No output)

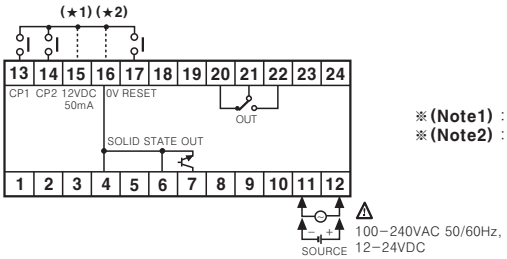

※**(Note1)** : Connection for PNP input
※**(Note2)** : Connection for NPN input

●F□AM / F□AM-2P / F□BM(No output)

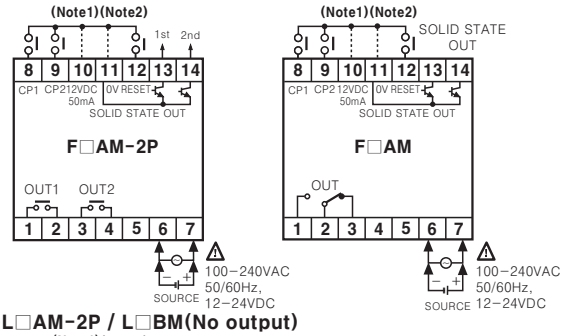

●L□AM-2P / L□BM(No output)

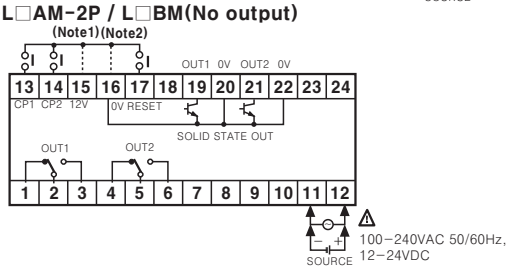

LCD timer(LE8N Series)

▣Ordering information

LE 8 N – B F

Input type	F	Free voltage input
	N	No-voltage(Small signal) input
Power supply	B	Internal lithium battery
Size	N	DIN W48×H24mm
Digit	8	99999999(8digit)
Item	LE	LCD timer

▣Specifications

Model	LE8N-BN	LE8N-BF
Digit	8	
Appearances & Dimensions	CE c UL us [W48×H24×L54mm]	
Display	LCD zero blanking type(Height : 8.7mm)	
Operation method	Count up mode	
Power supply	Built-in lithium battery	
Input type	No-voltage input	Universal voltage input
Start input	Residual voltage : Max. 0.5VDC Impedance at short-circuit : Max. 10kΩ(ON) Impedance at open-circuit : Min. 750kΩ(OFF)	High : 24-240VAC / 6-240VDC Low : 0-2VAC / 0-2.4VDC
Reset input	No-voltage input	
Min.signal width of Reset	Min. 20ms	
Time range (TS1)	(※1) 9999.59.59(h.m.s), 99999.59.9(h.m), 999999.59(h.m)	
Time range (TS2)	(※1) 9999H59.9(h.m), 99999H59(h.m), 999999H.9(h)	
Time error	±0.01%(Repeat error, Time error, Temperature error)	
Battery life cycle	Over 10 years(Approx. 20℃)	
External switch	SW1(Front reset key Lock switch), SW2(Time range selection switch)	
Insulation resistance	Min. 100MΩ(at 500VDC megger)	
Dielectric strength	(※2) 2000VAC 60Hz for 1 minute	

(※1) Select TS1, TS2 using inner jump pin(JP1).
(※2) No-voltage input: Between all terminals and case, Universal voltage input: Between input terminal and reset input terminal, all terminals and case.

▣Connection

●No-voltage input

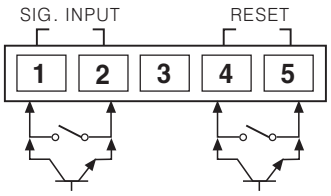

※Use reliable contacts enough to flow 5μA of current.
※Terminal 2 and 5 are connected inside.(Non-isolation)

●Free voltage input

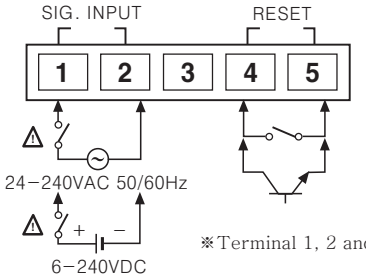

※Terminal 1, 2 and 4, 5 are isolated.

▣Dimensions

●Bracket

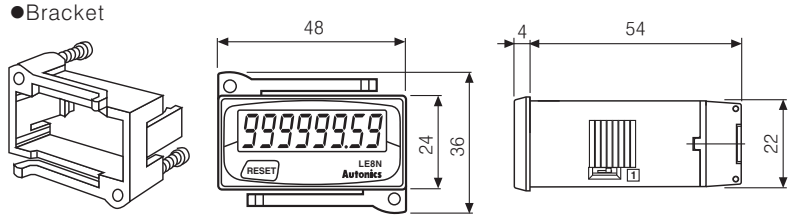

●Panel cut-out

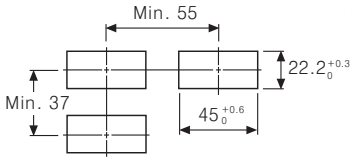

Unit:mm

Weekly/yearly timer(LE7M-2/LE365S-41)

■Ordering information

LE7 M − 2

- Output: 2 — 2 Relay outputs
- Size: M — DIN W72×H72mm
- Item: LE7 — Weekly/Yearly timer

LE365 S − 4 1

- Output: 1 — 1 Relay outputs
- Power supply: 4 — 100−240VAC
- Size: S — DIN W48×H48mm
- Item: LE365 — Weekly/Yearly timer

■Specifications

Model		LE7M-2	LE365S-41
Appearances & Dimensions		[W72×H72×L60mm]	[W48×H48×L60mm]
Power supply		100−240VAC 50/60Hz	
Allowable voltage range		90 to 110% of rated voltage	
Power consumption		4.2VA	2.4VA
RETURN input		Short−circuit or open by switch or relay	———
Timing program		48 steps for weekly, 24 steps for yearly	
Operation mode		ON/OFF mode, cycle mode, pulse mode	
Temperature error		Max. ±0.01% ±0.05sec	
Mounting		Front panel, Surface, DIN rail	
Time deviation		±15sec./month(25℃) (±4sec./week)	
Memory protection		Over 5 years(at 25℃)	
Control output	Contact type	SPDT(Single Pole Double Contact)	SPST(Single Pole Single Contact)
	Contact capacity	250VAC 10A resistive load	250VAC 15A resistive load
	Output number	Independent 2 output(1c × 2)	Independent 1 output(1a)
Relay life cycle	Mechanical	Min. 5,000,000 operations(Switching capacity 30 times/minute)	
	Electrical	Min. 50,000 operations<Switching capacity 20 times/1 minute, at 250VAC 10A(resistive load)>	Min. 50,000 operations<Switching capacity 20 times/1 minute, at 250VAC 15A(resistive load)>

■Front panel identification

◎LE7M-2

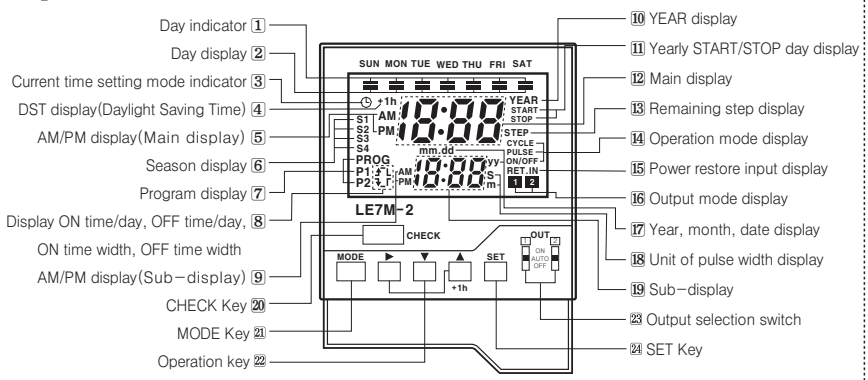

◎LE365S-41

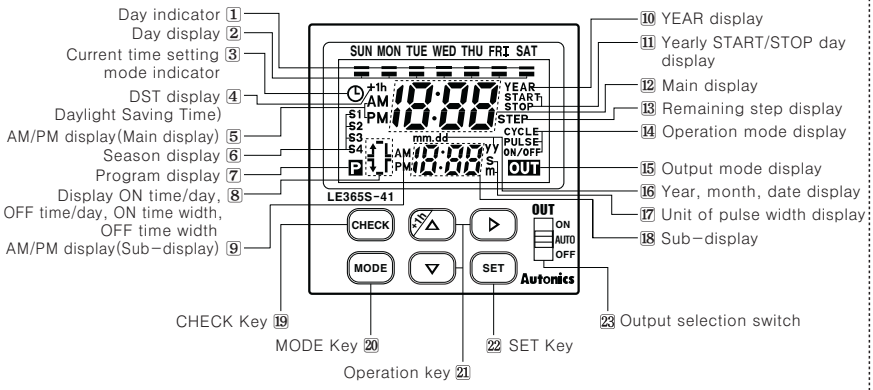

■Connections

◎LE7M-2

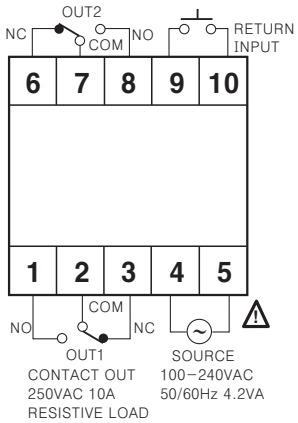

◎LE365S-41

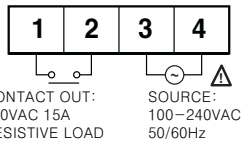

Digital timer(LE3S/LE4S, FS Series)

■Ordering information

LE 3 S □

Output	No mark	Time-limit 1c
	A	Time-limit 2c
	B	Time-limit 1c, Instantaneous 1c
Size	S	DIN W48×H48mm
Digit	3	999(3digit)
	4	9999(4digit)
Item	E	LCD timer

FS 4 E □

Output	No mark	Single preset
	I	Indicator(No output)
Counter/Timer	E	Timer
Digit	4	9999(4digit)
	5	99999(5digit)
Item	FS	8pin plug timer(DIN W48×H48mm)

■Specifications

Type		LCD type		Backlight LCD type		LED type	
Model		LE3S	LE3SA, LE3SB	LE4S	LE4SA	FS4E	FS5EI
Appearances & Dimensions		CE (Only for LE3S) c UL us [H48×W48×L67mm]		CE c UL us [H48×W48×L86mm]		[H48×W48×L85mm]	
Operation		Multi time and operation	Multi time range, Power ON delay operation	Multi time and operation		Single preset Up/Down timer	Up/Down indicator
Power supply		24-240VAC 50/60Hz / 24-240VDC				100-240VAC 50/60Hz, 12-24VAC/DC(Option)	
Input	START input	No-voltage input • Impedance at short-circuit : Max. 1kΩ • Residual voltage at short-circuit : Max. 0.5VDC • Impedance at open-circuit : Min.100kΩ	———	No-voltage input • Impedance at short-circuit : Max. 1kΩ • Residual voltage at short-circuit : Max. 0.5VDC • Impedance at open-circuit : Min. 100kΩ	———	———	
	INHIBIT input		———		———	No-voltage input • Impedance at short-circuit : Max. 470Ω • Residual voltage at short-circuit : Max. 1VDC • Impedance at open-circuit : Min.100kΩ	
	RESET input		———		———		
Control output	Contact type	Time-limit SPDT(1c)	**LE3SA** Time-limit DPDT(2c) **LE3SB** Time-limit SPDT(1c), Instantaneous SPDT(1c)	Time-limit SPDT(1c)	Time-limit DPDT(2c) Time-limit SPDT(1c) +Instantaneous SPDT (1c) selectable	Time-limit SPDT(1c)	———
	Contact capacity	250VAC 5A resistive load	250VAC 3A resistive load	250VAC 5A resistive load	250VAC 3A resistive load		———
Repeat error		Max. ±0.01%± 0.05sec.(Power Start) Max. ±0.005%± 0.03sec.(Signal Start)	±0.01% ±0.05sec.	Max. ±0.01% ± 0.05sec.(Power Start) Max. ±0.005% ± 0.03sec.(Signal Start)		Max. ±0.01% ±0.05sec.	
Setting error							
Voltage error							
Temperature error							

※Allowable voltage range:90 to 110% of rated voltage.

■Connections

◎LE3SA

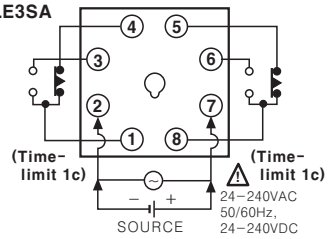

◎LE3SB

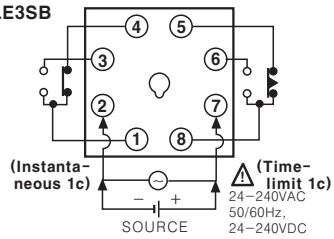

◎LE3S/LE4S

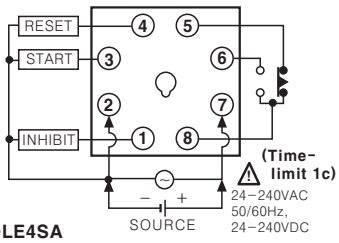

◎FS4E/FS5EI(No output)

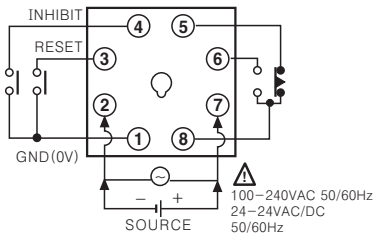

◎LE4SA

●[ON.D] [ON.D.II] [FK] [INT] [T] [T. I] mode

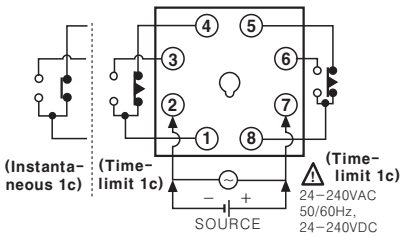

●[⅄-Δ] mode

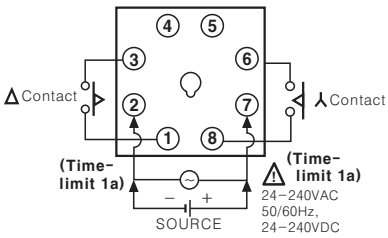

■Front panel indentification

◎LE4S series

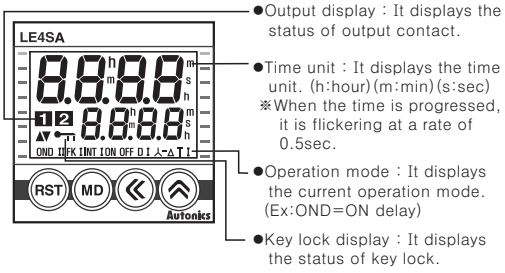

◎LE3S series

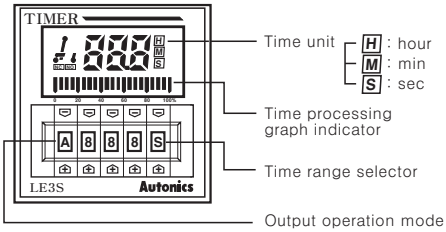

Multi function analog timer(ATN Series)

▣Ordering information

AT 8 N – □

Power supply	No mark	100–240VAC/24–240VDC
	1	12VDC
	2	24VAC/DC
Output	N	Time limit contact 2c or time limit contact 1c with instantaneous contact 1c by selecting output operation mode.
Plug type	8	8pin plug type
Item	AT	Analog timer

※Socket required : PG–08, PS–08

AT 11 DN – □

Power supply	No mark	100–240VAC/24–240VDC
	1	12VDC
	2	24VAC/DC
Output	DN	Time limit 2c
	EN	Time limit 1c, Instantaneous contact 1c
Plug type	11	11pin plug type
Item	AT	Analog timer

※Socket required : PG–11, PS–11

▣Specifications

Type		Multi function timer		
Model		AT8N-□	AT11EN-□	AT11DN-□
Appearances & Dimensions				
Control time setting range		0.05 sec. to 100 hour		
Power supply		• 100–240VAC 50/60Hz, 24–240VDC • 24VAC 50/60Hz, 24VDC • 12VDC		
Allowable voltage range		90 to 110% of rated voltage		
Power consumption		• 100–240VAC : 4.3VA, 24–240VDC : 2W • 24VAC : 4.5VA, 24VDC : 2W • 12VDC : 1.5W		• 100–240VAC:3.5VA, 24–240VDC:1.5W • 24VAC:4VA, 24VDC:1.5 • 12VDC:1W
Reset time		Max. 100ms		
Min.input signal width	START input	———	Min. 50ms	
	INHIBIT input			
	RESET input			
Input	START input	———	No–voltage input ☞ Short–circuit impedance : Max. 1kΩ Residual voltage : Max. 0.5V Open–circuit impedance : Min. 100kΩ	
	INHIBIT input			
	RESET input			
Timing operation		Power ON start type	Signal ON Start type	
Control output	Contact type	Time limit DPDT(2c), Time limit DPDT(1c)+ Instantaneous DPDT(1c) by selecting output operation mode	Time limit SPDT(1c), Instantaneous SPDT(1c)	Time limit DPDT(2c)
	Contact capacity	250VAC 5A resistive load		
Relay life cycle	Mechanical	Min. 10,000,000 operations		
	Electrical	Min. 100,000 operations(250VAC 5A resistive load)		
Repeat error		Max. ±0.2 % ±10ms		
SET error		Max. ±5% ±50ms		
Voltage error		Max. ±0.5%		
Temperature error		Max. ±2%		

▣Front panel identification

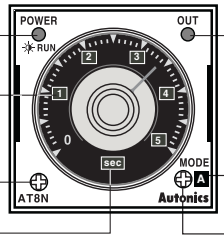

Operation/Power LED
(Timer operation:Flashing
Timer stop:LED ON)

Time range display

Time range selector
(Changing the time unit per 4 revolutions)

Time unit
(sec, min, hour, 10h)

Output LED
[Time limit output operation(ON) : Light on]

Operation mode display
AT8
(**A, A1, B, F, F1,** I mode)
AT11DN/AT11EN
(**A, F, F1, C, D,** I mode)

Operation mode selector

※Please rotate the time range switch and operation mode switch to CW(Clockwise) direction.

▣Connections

◎**AT8N**

●[**A1**], [**B**], [**F1**], [I] mode

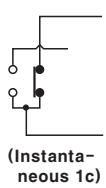

(Instantaneous 1c)

●[**A**], [**F**] mode

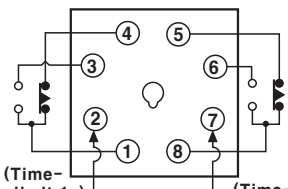

(Time-limit 1c)

(Time-limit 1c)

SOURCE

• 100–240VAC 50/60Hz, 24–240VDC
• 24VAC 50/60Hz, 24VDC
• 12VDC

◎**AT11DN**

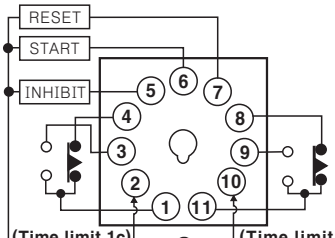

(Time limit 1c)

(Time limit 1c)

SOURCE

• 100–240VAC 50/60Hz, 24–240VDC
• 24VAC 50/60Hz, 24VDC
• 12VDC

◎**AT11EN**

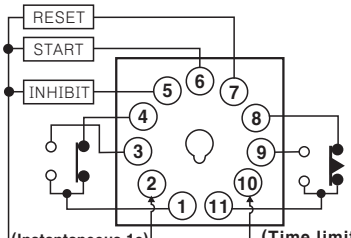

(Instantaneous 1c)

(Time limit 1c)

SOURCE

• 100–240VAC 50/60Hz, 24–240VDC
• 24VAC 50/60Hz, 24VDC
• 12VDC

Analog timer(AT8SDN, AT8PSN/AT8PMN, ATE Series)

▣Ordering information

AT 8 SDN

Function type	SDN	Star delta
Plug type	8	8pin plug type
Item	AT	Analog timer

※Socket required : PG-08, PS-08

ATE □ - 10 S

Time unit	s:sec m:min h:hour	
Time range	Number	Max. range
Output	No mark	Time-limit 1c, Instantaneous 1a
	1	Time-limit 2c
	2	Time-limit 1c, Instantaneous 1c
Item	ATE	ON delay timer

AT 8 P SN - □

Power supply	No mark	200-240VAC
	2	24VAC/DC
	6	100-120VAC
	7	100/110VDC
Time range	SN	sec
	MN	min
Function type	P	Power off delay
Plug type	8	8pin plug type
Item	AT	Analog timer

▣Specifications

Type		Star delta timer	OFF delay timer	Single range timer		
Model		**AT8SDN**	**AT8PSN / AT8PMN**	**ATE-sec, min, hour**	**ATE1-sec, min, hour**	**ATE2-sec, min, hour**
Appearances & Dimensions		[W48×H48×L65mm]	[W48×H48×L65mm]	[W48×H48×L79mm]	[W48×H48×L79mm]	[W48×H48×L79mm]
Function		**Star-Delta**	**Power OFF Delay**	**Power ON Delay**		
Control time setting range		0.5 to 100sec.(Max.)	**AT8PSN** : 0.05 to 10sec. **AT8PMN** : 0.05 to 10min.	1sec, 3sec, 6sec, 10sec, 30sec, 60sec, 3min, 6min, 10min, 30min, 60min, 3hour ,6hour, 12hour, 24hour		
Power supply		100-240VAC 50/60Hz / 24-240VDC	• 100-120VAC 50/60Hz • 100/110VDC • 200-240VAC 50/60Hz • 24VAC 50/60Hz, 24VDC	110/220VAC 50/60Hz	110VAC, 220VAC 50/60Hz, 12VDC, 24VDC(Option)	
Allowable voltage range		90 to 110% of rated voltage				
Power consumption		100-240VAC : 3.2VA, 24-240VDC : 1.5W	• 100-120VAC : 1.5VA • 200-240VAC : 1.5VA • 100/110VDC : 0.8W • 24VAC : 0.2VA, 24VDC : 0.2W	Approx. 10VA(240VAC 60Hz), Approx. 2W(24VDC, 12VDC)		
Reset time		Max. 100ms	———	Max. 200ms		
Control output	Contact type	⅄ contact : SPST(1a), Δ contact : SPST(1a)	Time-limit DPDT(2c)	Time-limit SPDT(1c), Instantaneous SPST(1a)	Time-limit DPDT(2c)	Time-limit SPDT(1c), Instantaneous SPDT(1c)
	Contact capacity	250VAC 5A resistive load	250VAC 3A resistive load			
Relay life cycle	Mechanical	Min. 10,000,000 times				
	Electrical	Min. 100,000 times (250VAC 5A resistive load)	Min. 100,000 times(250VAC 3A resistive load)			
Repeat error		Max. ±0.2 % ±10ms		Max. ±0.3%		
Setting error		Max. ±5% ±50ms		Max. ±5% ±0.05sec.		
Voltage error		Max. ±0.5%				
Temperature error		Max. ±2%				

▣Front panel identification

◎AT8SDN

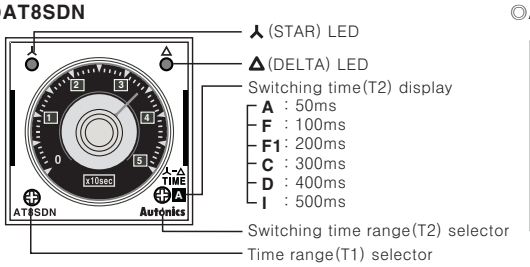

◎AT8PSN/AT8PMN

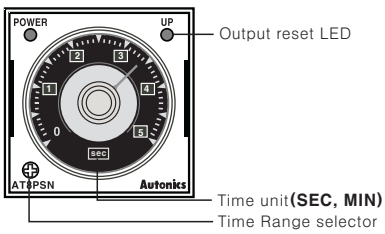

◎ATE/ATE1/ATE2

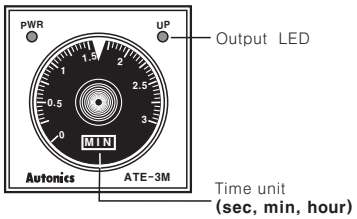

▣Connections

◎AT8SDN

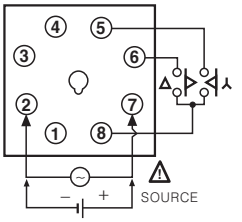

◎AT8PSN

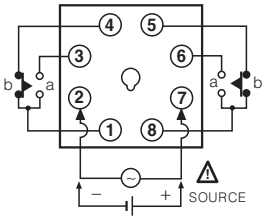

◎ATE Series

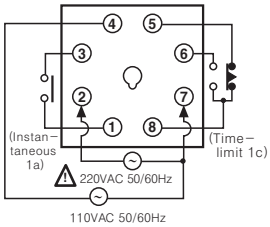

◎ATE1 Series

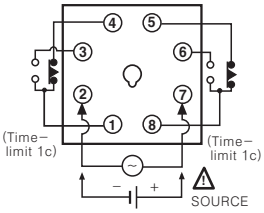

◎ATE2 Series

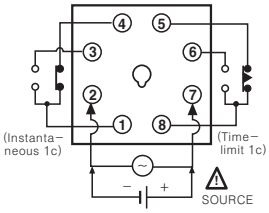

Loop powered digital scaling meter(M4NS/M4YS Series)

▣Ordering information

M 4 N S − N A

Input	A	DC4−20mA
Power supply	N	Loop powered type
Scaling meter	S	Scaling meter
Size	N	DIN W48×H24mm
	Y	DIN W72×H36mm
Digit	4	9999(4digit)
Item	M	Meter

▣Specifications

※It is available to set a various display value by prescale function.

Model	M4NS-NA	M4YS-NA
Appearances & Dimensions	[W48×H24×L48mm]	[W72×H36×L77mm]
Power supply	Loop powered type	
Input	DC4−20mA	
Max. display range	−1999 to 9999(4digit)	
Display method	7 Segment LED display	
Character height	10mm	14mm
Display accuracy	(※1) 0.3% F.S. of ±1digit	
Display cycle	Selectable 0.5sec./1sec./2sec./3sec./4sec./5sec.	
Various display unit	V, V, mV, mV, KV, A, A, mA, mA, μA, W, kW, VA, kVA, var, kvar, mm, cm, m, km, μm, cm^2, m^2, mm^2, cm^3, m^3, mg, g, kg, g/cm, kg/m, kg/cm^2, sec, min, hour, rps, rpm,m/min, cm/min, mm/min, mm/sec, cm/sec, m/sec, Pa, kPa, mPa, kgf/cm^2, kg·m, kgf/mm^2, mmHg, mmH_2O, psi, cal, kcal, ℓ, μℓ, mℓ, kℓ, Hz, kHz, MHz, %, ℃, ℉, Ω, kΩ, MΩ, COS φ, TON, DOC	
Resolution	12,000 resolution	
Setting type	Front switches	
Self−diagnosis function	Error display function(HHHH/LLLL)	
Prescale function	Input value×Scale value(1.000 to 5.000)=Display value(Changeable Dot position)	

(※1) Ambient temperature(25℃ ±5℃): 0.3% F.S. of ±1digit(−10 to 50℃: 0.4% F.S. of ±1digit)

▣Front panel identification

●M4NS−NA

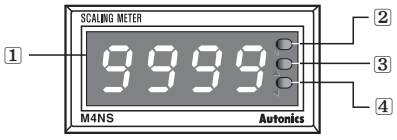

●M4YS−NA

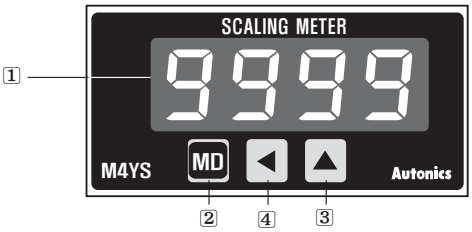

1 Display value, parameter, error display
2 M, MD key: When enter into parameter group, return to RUN mode, after completing parameter setting
3 ▲, ▲ (Up) key: When enter into the status of parameter setting
4 ◀, ◀ (Shift) key: When enter into the status of parameter setting and move digit

▣Connections

●M4NS−NA

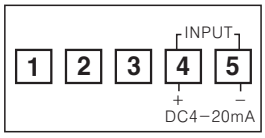

●M4YS−NA

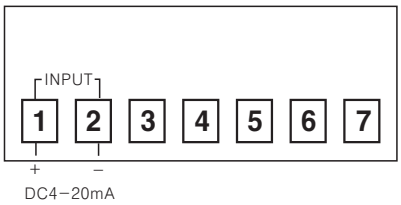

Digital multi panel meter(MT4N Series)

■Ordering information

MT 4 N – DV – E N

Output	N	Indicator(No output function)
	0	Relay contact output
	1	NPN open collector output
	2	PNP open collector output
	3	Relay contact output+Transmission output(DC4–20mA)
	4	Relay contact output+RS485 communication output

※Output(0 to 4) : Option

Power supply	E	12–24VDC/AC
	4	100–240VAC
Measuring input	DV	DC voltage
	DA	DC ampere
	AV	AC voltage
	AA	AC ampere
Size	N	DIN W48×H24mm
Digit	4	9999(4digit)
Item	MT	Multi meter

※To measure the current over 5ADC, please select DV type because the shunt should be used.

■Specifications

Model	MT4N-DV-E□ MT4N-DA-E□	MT4N-AV-E□ MT4N-AA-E□	MT4N-DV-4□ MT4N-DA-4□	MT4N-AV-4□ MT4N-AA-4□
Appearances & Dimensions	CE [W48×H24×L83mm]			
Measurement function	DC voltage, ampere	AC voltage, ampere, Frequency	DC voltage, ampere	AC voltage, ampere, Frequency
Power supply	12–24VDC/AC(90 to 110% of rated voltage)		100–240AC(90 to 110% of rated voltage)	
Power consumption	DC : 3W, AC : 5VA		5VA	
Display method	7Segment LCD display, Character height : 9mm			
Display accuracy	• 23℃±5℃ ☞ DC type: F.S.±0.1% rdg±2digit / AC type: F.S.±0.3% rdg±3digit DC/AC type : F.S. +0.3% rdg +3digit max. only for 5A terminal. • –10℃ to 50℃ ☞ DC/AC type: F.S.±0.5% rdg±3digit			
Max. allowable input	110% for input spec.			
A/D conversion method	Practical oversampling using successive approximation ADC			
Sampling cycle	DC type : 50ms, AC type : 16.6ms(Resolution 1/12000)			
Max. display range	–1999 to 9999(4digit)			
Preset output	• Relay output ☞ Contact capacity : 125VAC 0.3A, 30VDC 1A/Contact composition : N.O(1a) • NPN/PNP open collector output ☞ 12–24VDC ±2V 50mA Max.(Load resistance)			
Sub output (Transmission output)	• RS485 communication output ☞ Baud rate : 1200/2400/4800/9600, Communication method : 2 wires half duplex, Tuning method : Sub–synchronization, Protocol : Modbus RTU • Transmission(DC4–20mA) output ☞ Resolution : 12,000 division(Load resistance max. 600Ω)			
AC measuring function	(※1)	Selectable RMS or AVG		
Frequency measuring function	(※1)	Measurement range : 0.100 to 9999Hz(Differ according to decimal point position)		
Hold function	(※2)	Includes(Outer hold function)		

(※1) AC measuring function, and frequency measuring function are only for AC measuring input type.
(※2) The indicator has no hold function.

■Front panel identification

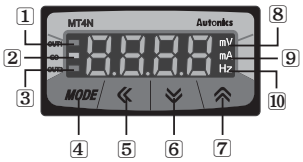

1 OUT1 : Preset output of OUT1
2 GO : Preset Go output of OUT1/OUT2
3 OUT2 : Preset output of OUT2
4 MODE key : Mode key
5 ≪ : Shift key
6 ≫ : Down key
7 ⌃ : Up key
8 mV, V unit
9 mA, A unit
10 Hz unit

※There is no 1, 2, 3 on a display panel of MT4N–□□–□N.
※MT4N–□□–□3, □4 model has output display part of OUT1 only.

Digital multi panel meter(MT4N Series)

▣Connections

◎Measuring input terminal connection

●MT4N-DV-E□

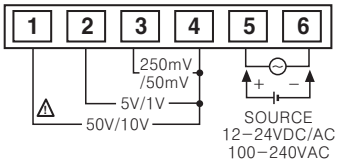

●MT4N-DA-E□

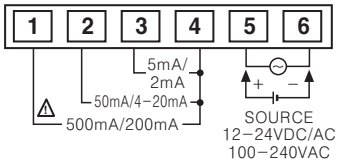

●MT4N-AV-E□

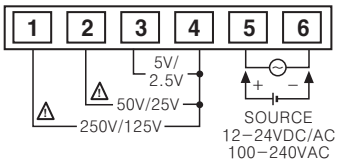

●MT4N-AA-E□

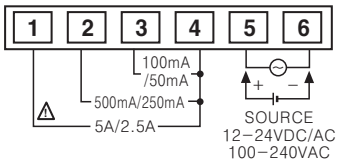

〈Option〉

●Relay output
[MT4N-□□-E0]

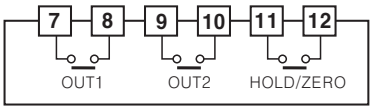

●NPN open collector output
[MT4N-□□-E1]

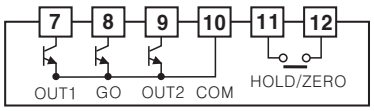

●PNP open collector output
[MT4N-□□-E2]

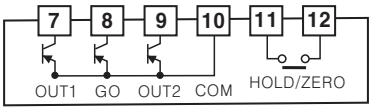

●Relay+Current(DC4-20mA) output
[MT4N-□□-E3]

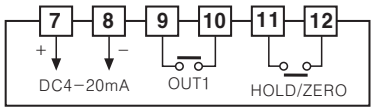

●Relay+RS485 communication output
[MT4N-□□-E4]

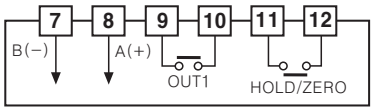

▣Dimensions

●MT4N−□□−EN

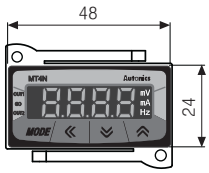

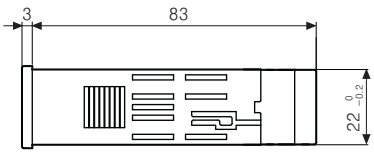

●Panel cut−out

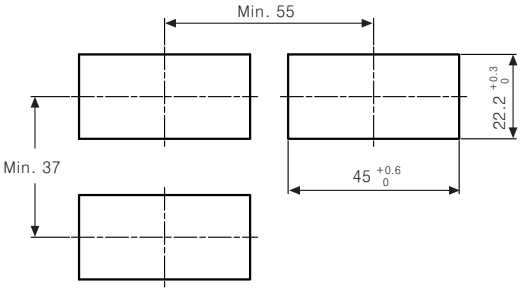

※Process the unit after consider the above recommened cut−out fully.

●MT4N−□□−E0

●MT4N−□□−E1, E2

●MT4N−□□−E3, E4

Unit:mm

Digital multi panel meter(MT4Y/MT4W Series)

■Ordering information

MT 4 W – DV – 4 N

Output

(※)Y type

N	Indicator(No output)
0	Relay contact output
1	NPN open collector output
2	PNP open collector output
(※1) 3	Relay contact output + Transmission output(DC4–20mA)
(※1) 4	Relay contact output + RS485 communication output
5	BCD dynamic output
6	Low speed serial output

※Output(0 to 6) : Option
(※1) Relay contact output of 3, 4 is able only to Low out.

W type

N	Indicator(No output)
0	Relay contact output+Transmission output(DC4–20mA)
1	Relay contact output
2	NPN open collector output+BCD dynamic output
3	PNP open collector output+BCD dynamic output
4	NPN open collector output+Transmission output(DC4–20mA)
5	PNP open collector output+Transmission output(DC4–20mA)
6	NPN open collector output+Low speed serial output
7	PNP open collector output+Low speed serial output
8	NPN open collector output+RS485 output
9	PNP open collector output+RS485 output

※Output(0 to 9) : Option

Power supply

4	100–240VAC

Measuring input

DV	DC volt
DA	DC ampere
AV	AC volt
AA	AC ampere

Size

Y	DIN W72×H36mm
W	DIN W96×H48mm

Digit

4	9999(4digit)

Item

MT	Multi meter

■Specifications

Model	MT4Y-DV	MT4Y-DA	MT4Y-AV	MT4Y-AA	MT4W-DV	MT4W-DA	MT4W-AV	MT4W-AA
Appearances & Dimensions	[W72×H36×L77mm]				[W96×H48×L100mm]			
Power supply	100–240VAC 50/60Hz, 12–24VDC(90 110% of rated voltage)				100–240VAC 50/60Hz(90 to 110% of rated voltage)			
Max. input specification	500VDC	5ADC	500VAC	5AAC	500VDC	5ADC	500VAC	5AAC
Max. display range	–1999 to 9999(4digit)							
Display method	7Segment LED display							
Various display unit	V V kV kV μV mV mV A A kA μA mA VA KVA W kW mm cm m km m³ m/s² m/s km/h M/min kg/cm² kg/cm² mg kg g ℃ ℉ μA Ω kΩ rpm % %RH mmHg var kvar dB N J μbar HP KWh cal cosφ Hz ℓ cd/m² lx							
Prescale function	Input value×Scale value(0.100 to 5.000)=Display value(Value depends on dot position)							
Error correction	Correct the error of high/low–limit							
Preset output	• NPN open collector output(12–24VDC Max. 50mA) • PNP open collector output(12–24VDC Max. 50mA) } Selectable				• Relay output(3output 3A 250VAC, 3A 30VDC) • NPN open collector output(12–24VDC Max. 50mA) • PNP open collector output(12–24VDC Max. 50mA) } Selectable			
Optionnal	**• RS485 communication output • Low-speed serial output • BCD output • DC4-20mA Analog output**							
Monitoring function	Check Max/Min value and display(Monitoring delay time setting function 0 to 30sec.)							
AC measuring method	(※1) Selectable RMS or AVG							
Frequency measuring function	(※1) Measurement range : 0.100 to 9999Hz(Fixed decimal point type)							
Display accuracy	(※2) • 23℃±5℃ ☞ DC type: F.S.±0.1% rdg±2digit / AC type: F.S.±0.3% rdg±3digit DC/AC type : F.S. +0.3% rdg +3digit max. only for 5A terminal. • –10℃ to 50℃☞ DC/AC type: F.S.±0.5% rdg±3digit							
A/D conversion method	Practical Over sampling using successive approximation ADC							
Sampling cycle	DC type : 50ms, AC type : 16.6ms(Resolution 1/12000)							
Main output – Relay output	• Contact capacity : 250VAC 3A, 30VDC 3A • Contact composition: N.O(1a)							
Main output – NPN open collector output / PNP open collector output	12–24VDC ±2V 50mA Max. (Resistive load)							
Sub output (Transmi–ssion output) – RS485 communication output	• Baud rate : 1200/2400/4800/9600bps • Communication type : 2 wires half duplex • Protocol : Modbus RTU • Tuning method : Sub–synchronization							
Sub output – Serial output / BCD output	NPN open collector output, 12–24VDC Max. 50mA(Resistive load)							
Sub output – Transmission(DC4–20mA) output	Resolution : 12000 division(Load resistance max. 600Ω)							
Hold function	(※3) Including(Outer hold function)							

(※1) AC measuring function, and frequency measuring function are only for AC measuring input type.
If only frequency input the AC type(display method of measuring input) which option is in MT4W, MT4W will operate the only indicating type.
(※2) Frequency measuring accuracy : 1kHz Max. ±0.1% F.S., 1kHz to 10kHz Max. ±0.3% F.S.
(※3) MT4Y–□□–4N model has no hold function.

■Front panel identification

●MT4Y Series

1 HI : High output indication of preset
2 GO : GO output indication of preset
3 LO : Low output indication of preset

●MT4W Series

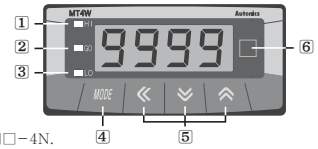

4 MD key : Enter to parameter group, Memorize the setting value,Move the parameter mode
5 ◀ key : Move the digit, Enter to parameter group
▼, ▲ key : Change the setting value.
6 Unit

※There is no 1, 2, 3 on a display panel of MT4Y–□□–4N, 45, 46 and MT4W–□□–4N.
※In MT4Y–□□–43, 44, OUT is used for Go output display and there is no 1, 3 in display panel.

Digital multi panel meter(MT4Y/MT4W Series)

▣Connections

◎Measuring input connection of MT4Y series

●MT4Y-DV-4□

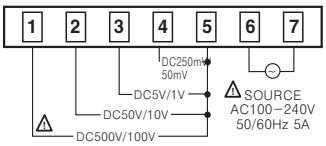

●MT4Y-AV-4□

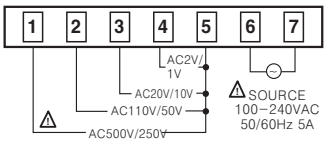

●MT4Y-DA-4□

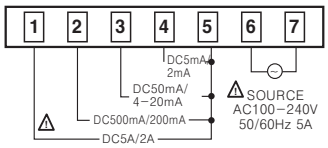

●MT4Y-AA-4□

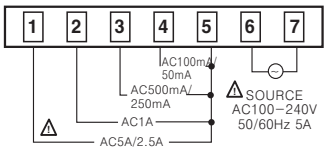

◎Output terminal of connection of MT4Y Series

●MT4Y-□□-4N(Indicator)

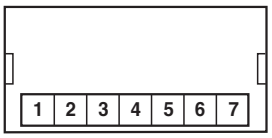

●MT4Y-□□-40(Triple relay output)

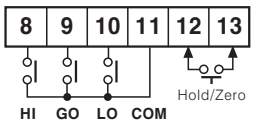

●MT4Y-□□-41(Triple NPN O.C output)

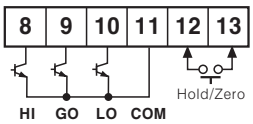

●MT4Y-□□-42(Triple PNP O.C output)

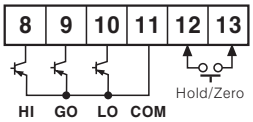

●MT4Y-□□-43(Relay output+Transmission output)

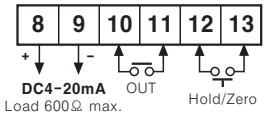

●MT4Y-□□-44(Relay output+RS485)

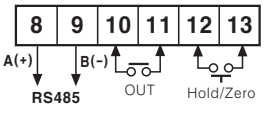

●MT4Y-□□-45(BCD Dynamic output)

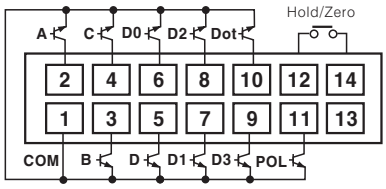

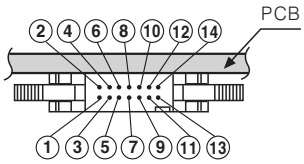

※Hirose connector : HIF3BA−14PA−2.54DS
※When purchasing a product, socket of Hirose connector is not included.[Socket : HIF3BA−14D−2.54R]

●MT4Y-□□-46(Low speed serial output)

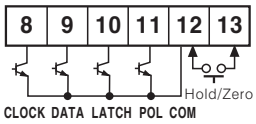

※POL : When a display value is "−", the signal of "−" will be outputted.

◎Measuring input connection of MT4W Series

●MT4W-DV-4□

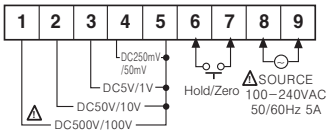

●MT4W-AV-4□

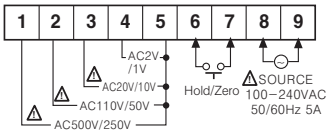

●MT4W-DA-4N

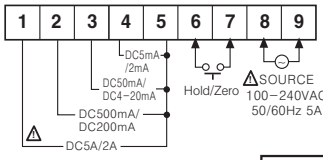

●MT4W-AA-4N

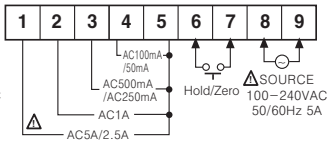

◎Output terminal connection of MT4W Series

●MT4W-□□-40 (Triple relay contact output +Transmission output)

MAIN OUT
CONTACT OUT
:250VAC 3A 1a RESISTIVE LOAD

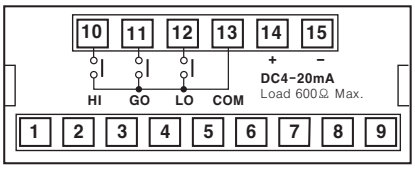

●MT4W-□□-41 (Triple relay contact output)

MAIN OUT
CONTACT OUT
:250VAC 3A 1a RESISTIVE LOAD

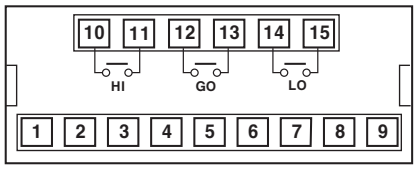

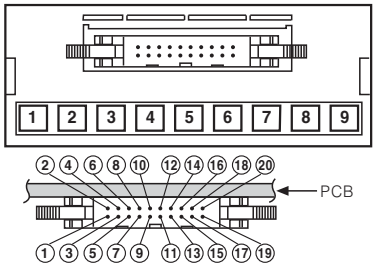

※Hirose connector : HIF3BA−20PA−2.54DS
※When purchasing a product, socket of Hirose connector is not included.[Socket : HIF3BA−20D−2.54R]

●MT4W-□□-42 / MT4W-□□-43
(Triple NPN/PNP open collector output+BCD output)

MAIN OUT :
NPN OPEN COLLECTOR
12−24VDC Max. 50mA

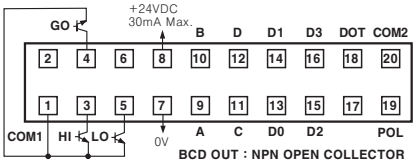

MAIN OUT :
PNP OPEN COLLECTOR
12−24VDC Max. 50mA

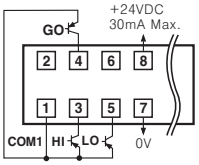

※POL : When a display value is "−", the signal of "−" will be outputted.

●MT4W-□□-44/ MT4W-□□-45
(Triple NPN/PNP open collector output+Transmission output)

MAIN OUT :
NPN OPEN COLLECTOR
12−24VDC Max. 50mA

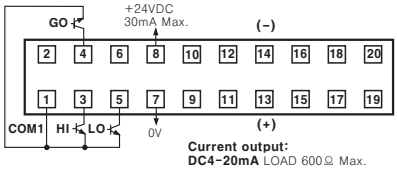

MAIN OUT :
PNP OPEN COLLECTOR
12−24VDC Max. 50mA

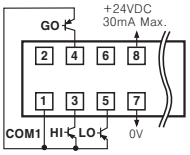

●MT4W-□□-46/ MT4W-□□-47
(Triple NPN/PNP open collector output+Low speed serial output)

MAIN OUT :
NPN OPEN COLLECTOR
12−24VDC Max. 50mA

※POL : When a display value is "−", the signal of "−" will be outputted.

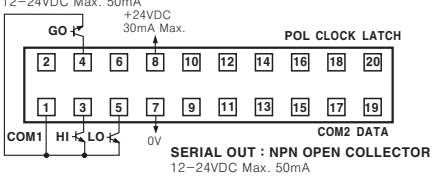

MAIN OUT :
PNP OPEN COLLECTOR
12−24VDC Max. 50mA

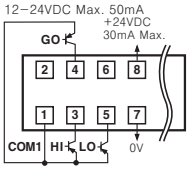

●MT4W-□□-48/ MT4W-□□-49
(Triple NPN/PNP open collector output+RS485 output)

MAIN OUT :
NPN OPEN COLLECTOR
12−24VDC Max. 50mA

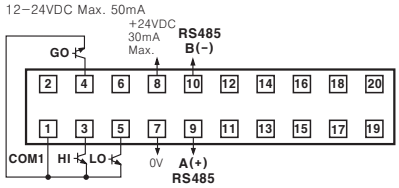

MAIN OUT :
PNP OPEN COLLECTOR
12−24VDC Max. 50mA

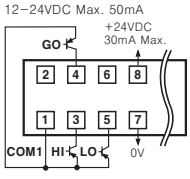

Digital panel meter(M4N Series)

▣Ordering information(M4N Series)

◎DC VOLT METER / DC AMPERE METER / DIGITAL SCALING METER

M 4 N – DV – 0 1

Measuring inuput

No.	DC voltage input F.S.	DC current input F.S.
1	199.9mV	199.9μA
2	1.999V	1.999mA
3	19.99V	19.99mA
4	199.9V	199.9mA
X	Option	Option

Power supply

0	5VDC
1	12–24VDC

Inuput

DV	Volt meter
DA	Ampere meter
DI	DC4–20mA(1–5VDC : Option)

Size

N	DIN W48×H24mm

Digit

4	1999(3½digit)

Item

M	Meter

※M4N series cannot measure AC voltage and ampere.
※Measuring range for direct connection is max. 200VDC, max. DC200mA.
※M4N–DI : 1–5VDC of measuring input specification is option. It will be a default value if there is no request for order.

▣Specifications

Model		M4N	M4V	M4W-P
Appearances & Dimensions		[W48×H24×L59mm]	※Graphic panel meter [W75×H25×L93mm]	※Power factor meter [W96×H48×L99.6mm]
Max. measuring input	Volt meter	200VDC	0–2VDC / 0–10VDC / 1–5VDC DC0–1mA / DC4–20mA	DC4–20mA
	Ampere meter	DC200mA		
	Scaling meter	DC4–20mA (1–5VDC Option)		
Max. display range		1999 (Fixed decimal point)	–999 to 9999	–0.50 to 1.00 to +0.50 cos ϕ
Setting type		———	Front switch adjustment type (Scale setting)	———
Power supply		5VDC ±10%, 12–24VDC ±10%	12–24VDC ±10%	110/220VAC 50/60Hz ±10%

▣Connections

●M4N

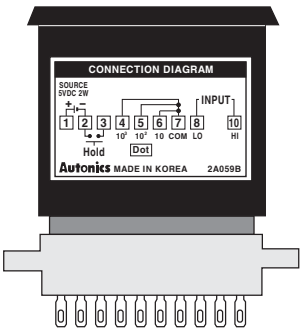

※Socket Pin No. :1 2 3 4 5 6 7 8 9 10

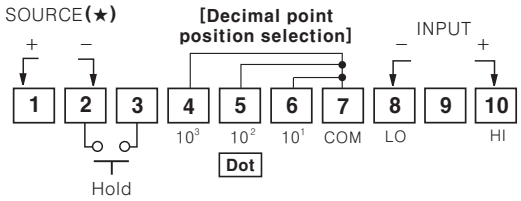

(★) 5VDC, 12–24VDC
※In case of changing position of decimal point, disconnect switching pattern point on PCB and connect terminal contact according point to be changed.
※Socket pin 9, NC terminal, is not connected at inside.

●M4V

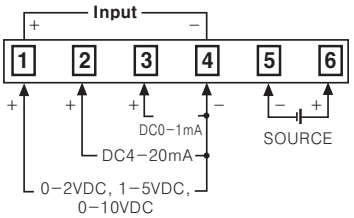

●M4W-P

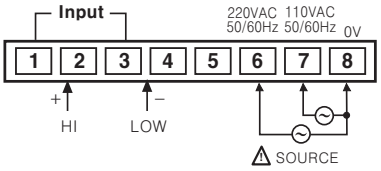

Digital panel meter(M4Y/M4W/M5W/M4M Series)

▣Ordering information

1)Volt meter

M 4 W □ – AA □ – 1

(※1) Measuring input

No.	M4Y / M4W / M4M DC input (F.S.)	M4Y / M4W / M4M AC input (F.S.)	M5W DC input (F.S.)	M5W AC input (F.S.)
1	199.9mV	199.9mV	199.99mV	199.99mV
2	1.999V	1.999V	1.9999V	1.9999V
3	19.99V	19.99V	19.999V	19.999V
4	199.9V	199.9V	199.99V	199.99V
5	300V	——	300.0V	400.0V
6	——	400V	——	——
XX	Option		Option	

(※2)

AC measuring method (※3)

No mark	AVG value
R	RMS value

Input

DV	DC volt
DA	DC ampere
AV	AC volt
AA	AC ampere

Output

No mark	Indicator
1P	Single setting
2P	Dual setting

Size (※4)

Y	DIN W72×H36mm
W	DIN W96×H48mm
M	DIN W72×H72mm

Digit

4	1999(3½digit)
5	19999(4½digit)

Item

M	Meter

(※1) Measuring input and display are 1:1.
(※2) Available input can be direct connection if under 300VDC, 400VAC.
(※3) RMS only applies to AC measuring type. Do not enter "R" with DC model.
(※4) M4Y, M5W are indicator.

▣Specifications

Series		M4Y	M4W / M4W1P / M4W2P	M5W	M4M / M4M1P / M4M2P
Appearances & Dimensions		[W72×H36×L93mm]	[W96×H48×L104mm]	[W96×H48×L104mm]	[W72×H72×L113mm]
Indicator		●	●	●	●
Single preset		——	●	——	●
Dual preset		——	●	——	●
Max. measuring input	Volt meter	Max. 300VDC, Max. 400VAC			
	Ampere meter	• 2ADC(SHUNT for DC50mV output type only is used to the measuring input value of over 2ADC) • 5AAC(C.T for 5AAC output type only is used to the measuring input value of over 5AAC)			
	Watt meter	Max. 10VDC(Output specification of power converter)			
	Tacho/Speed meter	0–10VDC, 0–10VAC(Tachogenerator output)			
	Scaling meter	DC4–20mA, 1–5VDC(Option)			
Max. display range		1999(Fixed decimal point)		19999(Fixed decimal point)	1999(Fixed decimal point)
Power supply		100–240VAC 50/60Hz 24–70VDC(Option) 5VDC(Option)	110/220VAC 50/60Hz 100–240VAC(Option) 24–70VDC(Option)	100–240VAC 24–70VDC(Option)	110/220VAC 50/60Hz 100–240VAC(Option) 24–70VDC(Option)
Max. allowable input		150% per each input specification(In case of 400VAC : 120%)			
Contact capacity		• Single preset : 250VAC 3A 1c • Dual preset : 250VAC 3A 1c×2			

Digital panel meter(M4Y/M4W/M5W/M4M Series)

2)Ampere meter

M 4 W □ – AA □ – 1

Measuring input (※1)

No.	M4Y / M4W / M4M DC input (F.S.)	M4Y / M4W / M4M AC input (F.S.)	M5W DC input (F.S.)	M5W AC input (F.S.)
1	199.9μA	19.99mA	199.99μA	19.999mA
2	1.999mA	199.9mA	1.9999mA	199.99mA
3	19.99mA	1.999A	19.999mA	1.9999A
4	199.9mA	19.99A	199.99mA	19.999A
5	1.999A	199.9A	1.9999A	199.99A
6	19.99A	1999A	19.999A	1999.9A
7	199.9A	——	199.99A	——
8	1999A	——	1999.9A	——
XX	Option		Option	

AC measuring method (※2)

No mark	AVG value
R	RMS value

Input

DV	DC volt
DA	DC ampere
AV	AC volt
AA	AC ampere

Output

No mark	Indicator
1P	Single setting
2P	Dual setting

Size (※3)

Y	DIN W72×H36mm
W	DIN W96×H48mm
M	DIN W72×H72mm

Digit

4	1999(3½digit)
5	19999(4½digit)

Item

M	Meter

(※1) Measuring input and display is 1:1 for DC INPUT No.1to 5 and AC INPUT No.1 to 3, DC INPUT No.6 to 8 is used with DC50mV Shunt, AC INPUT No.4 to 6 are used with C.T(Current transformer)
(※2) RMS only applies to AC measuring type. Do not enter "R" with DC model.
(※3) M4Y, M5W are indicator.

3)Watt meter

M 4 W □ – W – 1

Display scale (※1)

NO	M4Y / M4W / M4M Display(F.S.)	M5W Display(F.S.)
1	199.9W	199.99W
2	1.999kW	1.9999kW
3	19.99kW	19.999kW
4	199.9kW	199.99kW
5	1999kW	1999.9kW
XX	Option	Option

Measurement function

W	Watt Meter

Output (※2)

No mark	Indicator(No output)
1P	Single setting
2P	Dual setting

Size

Y	DIN W72×H36mm
W	DIN W96×H48mm
M	DIN W72×H72mm

Digit

4	1999(3½digit)
5	19999(4½digit)

Item

M	Meter

(※1) When output specification of power converter is 0−10VDC, display value is maximum.
(※2) M4Y, M5W are indicators.
※If output specification of Converter or power converter is DC4−20mA or 1−5VDC, please use scaling meter.

Digital panel meter(M4Y/M4W/M5W/M4M Series)

4)Tacho/Speed meter

M 4 W □ – T □ – 1

Measuring input

No.	M4Y / M4W / M4M	M5W
	Input(F.S.)	Input(F.S.)
1	0–10VDC / 1999	0–10VDC / 1999.9
2	0–10VAC / 1999	0–10VAC / 1999.9
DX	DC input option	DC input option
AX	AC input option	AC input option

AC measuring method (※1)

No mark	AVG value
R	RMS value

Measument function

T	Tacho meter (m/min)
S	Line speed meter (m/min)

Output

No mark	Indicator
1P	Single setting output
2P	Dual setting output

Size (※2)

Y	DIN W72×H36mm
W	DIN W96×H48mm
M	DIN W72×H72mm

Digit

4	1999(3½digit)
5	19999(4½digit)

Item

M	Meter

(※1) AC measuring type of M5W only applies to RMS and it is not marked with "R" in the model name.
(※2) M4Y, M5W are indicator.

5)Scaling meter

M 4 W □ – DI – X

Display scale

X	Display range(Option)

Input (※1)

DI	DC4–20mA(1–5VDC : Option)

Output (※2)

No mark	Indicator(No output)
1P	Single setting
2P	Dual setting

Size

Y	DIN W72×H36mm
W	DIN W96×H48mm
M	DIN W72×H72mm

Digit

4	1999(3½digit)
5	19999(4½digit)

Item

M	Meter

(※1) 1–5VDC of measuring input specification is available by option.
It will be a default value if there is no request for order.
(※2) M4Y, M5W are indicators.

Digital panel meter(M4Y/M4W/M5W/M4M Series)

▣Connections

●M4Y

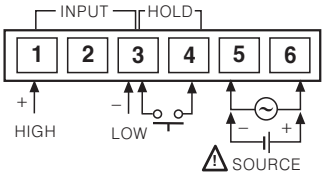

100−240VAC 50/60Hz
5VDC(Option)
24−70VDC(Option)

●M4W

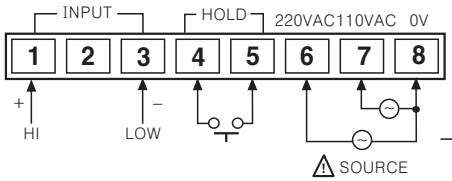

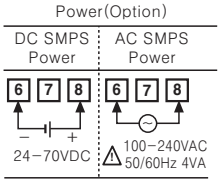

●M5W

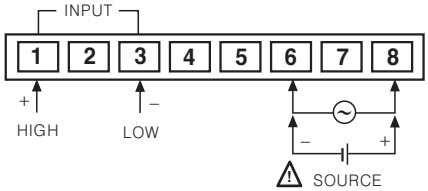

100−240VAC 50/60Hz
24−70VDC(Sold separately)

●M4W1P

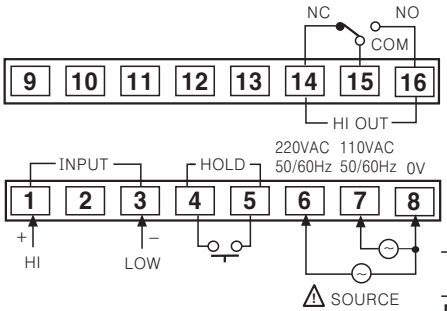

RELAY CONTACT OUT
:250VAC 3A 1c
RESISTIVE LOAD

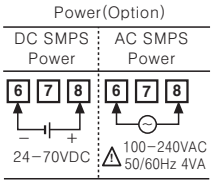

●M4W2P

RELAY CONTACT OUT
:250VAC 3A 1c RESISTIVE LOAD

RELAY CONTACT OUT
:250VAC 3A 1c RESISTIVE LOAD

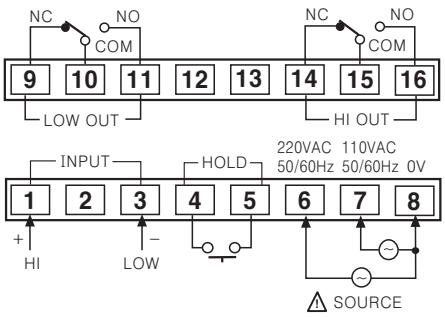

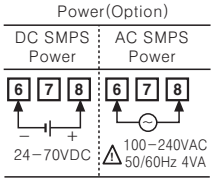

●M4M

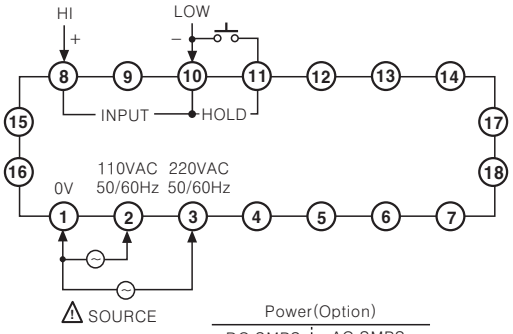

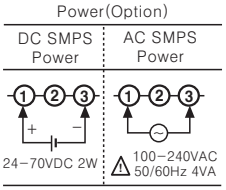

●M4M1P

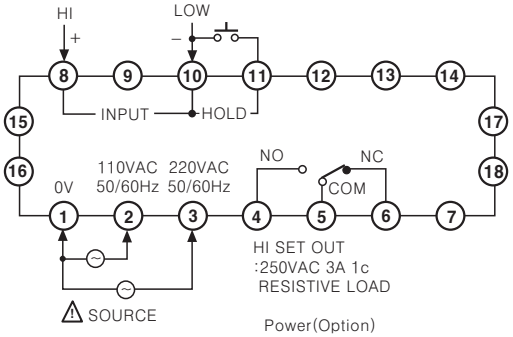

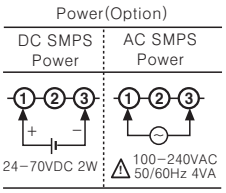

●M4M2P

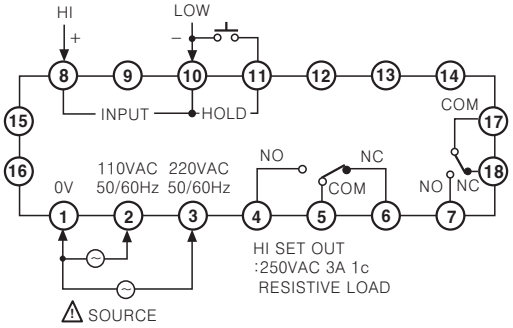

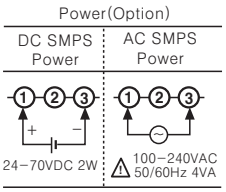

LCD pulse meter(LR5N Series)

▣Ordering information

LR 5 N – B

Power supply	B	Internal lithium battery
Size	N	DIN W48×H24mm
Digit	5	10000(4½digit)
Item	LR	LCD pulse meter

▣Specifications

Series		LR5N-B		
Digit		5		
Appearances & Dimensions		[W48×H24×L54mm]		
Input type		No-voltage input	Voltage input 1	Voltage input 2
Input signal level		• Impedance at short-circuit:Max. 10kΩ(ON), residual voltage:Max. 0.5V • Impedance at open-circuit:Min. 500kΩ(OFF)	DC: High voltage : 4.5-30VDC Low voltage : 0-2VDC AC: Voltage : 3-30VAC	Voltage : 30-240VAC
Battery life cycle		Over 3 years(at 20℃)		
Display method		LCD zero blanking type(Height : 8.7mm)		
Digit		5digit		
Display range	RPM	1 to 10000RPM		
	0.1RPM	0.1 to 1000.0RPM		
	RPS	1 to 1000RPS		
	Hz	1 to 1000Hz		
	0.1Hz	0.1 to 100.0Hz		
Display accuracy		F.S. ±0.1% ±1digit		
Insulation resistance		Min. 100MΩ(at 500VDC megger)		
Dielectric strength		2000VAC 50/60Hz for 1 minute(Cutoff current=10mA)		

▣Connections

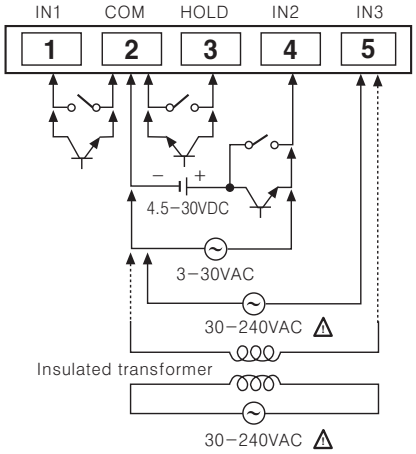

※Please use reliable contacts enough to flow 5μA of current when using input signal or reset signal as a contact.
※IN1 ☞ No-voltage input
IN2 ☞ Voltage input
• DC voltage input
• AC voltage input : Display AC frequency.
IN3 ☞ AC voltage input : Display AC frequency.
※Choose one among IN1, IN2 and IN3 to use.
※Caution for IN3 input
: If apply high voltage over 50VAC, it may cause an electric shock. Insulated transformer whose turn ratio is 1:1 must be installed, or countermeasures must be provided.

▣Dimensions

●Bracket

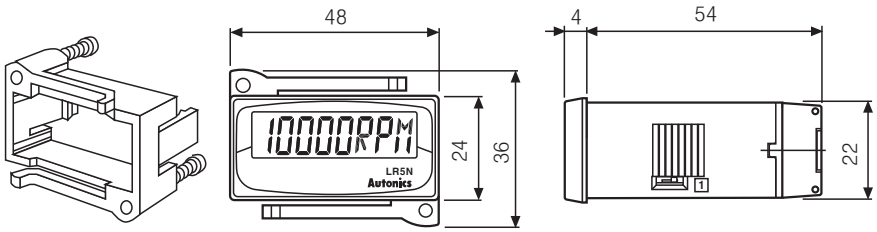

●Panel cut-out

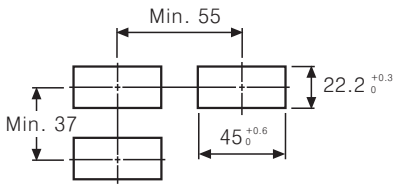

Unit:mm

Tacho/speed/pulse(rate) meter(MP5 Series)

▣Ordering information

MP 5 S – 4 N

		Main output(Comparative value output)	Sub output(Display value output)
Output – S type	N	Indicator(No output)	X
Output – Y type	N	Indicator	X
	1	NPN open collector quintuple output	X
	2	PNP open collector quintuple output	X
	3	Indicator	BCD Dynamic
	4	Indicator	PV transmission output(DC4–20mA)
	5	Indicator	RS485 communication output
Output – W type	N	Indicator(No output)	X
	A	Five relay(HH, H, GO, L, LL)	X
	1	Triple relay(H, GO, L)	X
	2	NPN open collector quintuple output	BCD dynamic
	3	PNP open collector quintuple output	BCD dynamic
	4	NPN open collector quintuple output	PV transmission output(DC4–20mA)
	5	PNP open collector quintuple output	PV transmission output(DC4–20mA)
	6	NPN open collector quintuple output	Low speed serial output
	7	PNP open collector quintuple output	Low speed serial output
	8	NPN open collector quintuple output	RS485 communication output
	9	PNP open collector quintuple output	RS485 communication output
Output – M type	N	Indicator	X
	1	Relay single(High–limit)output + NPN open collector output	X
	2	Relay dual(High/Low–limit) output + NPN open collector output	X
Power supply	2	12VDC	
	4	100–240VAC 50/60Hz	
Size	S	DIN W48×H48mm	
	Y	DIN W72×H36mm	
	W	DIN W96×H48mm	
	M	DIN W72×H72mm	
Digit	5	99999(5digit)	
Series	MP	Pulse meter	

※PNP open collector output : Option

▣Specifications

Model	MP5S	MP5Y	MP5W
Appearances & Dimensions	[W48×H48×L90mm]	[W72×H36×L102mm]	[W96×H48×L100mm]
Power supply	100–240VAC 50/60Hz(Allowable operation voltage : 90–110% of power supply)		
Power consumption	Max. 7.5VA(240VAC)	Max. 6W(12VDC), Max. 7VA(240VAC)	Max. 7W(12VDC), Max. 6VA(240VAC)
Power for external sensor	12VDC ±10%, 80mA		
Max. display range	–19999 to 99999		
Display method	7 Segment LED display(Zero blanking type)		
Display period	Selectable 0.05 / 0.5 / 1 / 2 / 4 / 8sec. (It is same with period of output update.)		
Input specification	[Voltage input] High : 4.5–24VDC, Low : 0–1VDC, Input impedance : 4.5kΩ [No voltage input] Impedance at short–circuit : Max. 300Ω, Residual voltage : Max. 1V, Impedance at open–circuit : Min. 100kΩ		
Input frequency	• Solid state input:Max. 50kHz(Pulse width:Each over 10㎲) • Contact input:Max. 45Hz(Pulse width:Each over 11ms)		
Operation mode	Number of revolution/Speed/Frequency(F1), Passing time(F2), Cycle(F3), Passing speed(F4), Time interval(F5), Time difference (F6), Absolute rate(F7), Error rate(F8), Density(F9), Error(F10), Measurement(F11), Interval(F12), Integration(F13)		
Various display unit	V, V̲, mV, mV̲, kV, A, A̲, mA, mA̲, W, VA, kVA, Var, kVar, kW, ㎠,㎡,㎟,㎤,㎥,㎜,㎝,㎞,㎛,㎎,㎏,㎏/㎠ ㎏/㎥,sec, min, hour min⁻¹, h⁻¹,sec.1/100s, sec.1/10s, min.1/100m, min.1/10m, min.s.1/10s, h.s.1/10s, h.min.s, h.min,rps, rpm, m/min, ㎥/min, ㎜/s, m/s², rPh, r/s, r/min, r/h, ㎏/h, ℓ ,㎏ℓ, ℓ /s, ℓ /min, ℓ /h, ℓ x, lx, Hz, kHz, t,℃, °F, Ω, kΩ, MΩ, Pa, kPa, MPa,kgf/㎟,kgf–㎝,gf–㎝, mmHg,mmH₂O,TON, G, O, K, S, S , s, rad, cal, kcal, L, kL, L/s, L/min, L/h, N, mN, KN, N m, mN·m, KN·m, J, kJ, m/s, ms, t/h, kg/s, PS, hP, dB, %, cPs, cP, cst, deg, ø–㎜, sccm, x10, x100, x1000, PH, PPM,counts		
Prescale function	Direct input method(0.0001×10^{-9} to -9.9999×10^{9})		
Hysteresis	0 to 9999		
Other functions	• Lock setting function • Auto–Zero time setting function • Time unit selection function • Peak value monitoring function • Memory protection function (Mode F13 applied only)	• Lock setting function • Monitoring delay function • Auto–zero time setting function • Current output range selection(Current output type only) • Comparative output function(HH, H, GO, L, LL) • Time unit selection function • Deviation memory function(F output mode applied only) • Peak value monitoring function • Remote/Local switching function(Communication output type only) • Data bank switching function **(MP5W series only)** • Memory protection function(Mode F13 applied only)	

Tacho/speed/pulse(rate) meter(MP5 Series)

▣Connections

◎MP5S Series

●**MP5S-4N**(Indicator)

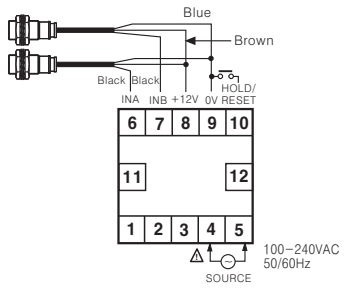

◎MP5Y Series

●**MP5Y-□N**(Indicator)

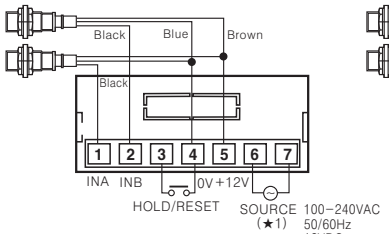

※(★1)It is used for RESET terminal when an operation mode is F13.

●**MP5Y-□4 to □5** (Main / Sub output)

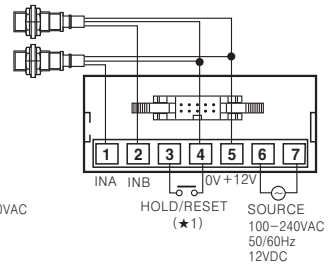

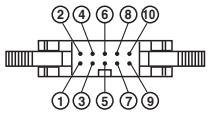

※Hirose Connector: HIF3BD-10PA-2.54DS

◎MP5Y Series main output

●**MP5Y-□1**(NPN open collector output)

MAIN OUT
(NPN OPEN COLLECTOR)
12-24VDC Max. 30mA

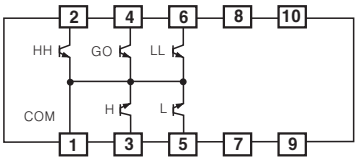

●**MP5Y-□2**(PNP open collector output)

MAIN OUT
(PNP OPEN COLLECTOR)
12-24VDC Max. 30mA

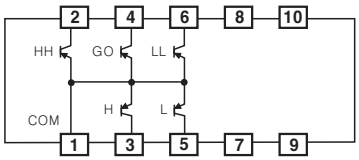

◎MP5Y Series sub output

●**MP5Y-□3**(BCD dynamic output)

BCD OUT(NPN OPEN COLLECTOR)
12-24VDC Max. 30mA

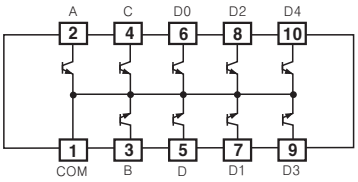

●**MP5Y-□4**(PV transmission output)

DC4-20mA
Load 600Ω Max.

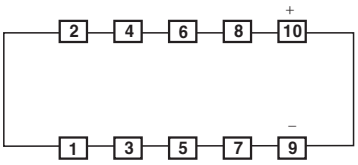

●**MP5Y-□5**(RS485 communication output)

RS485

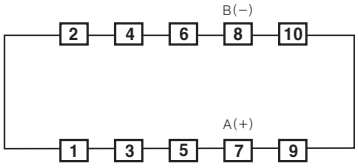

※Main output type & Sub output type : Option

◎MP5W Series

●**MP5W-□N**(Indicator)

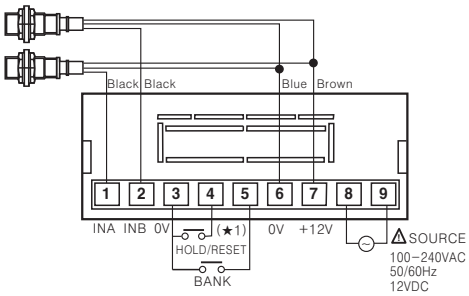

●**MP5W-□A**(Five relay output)

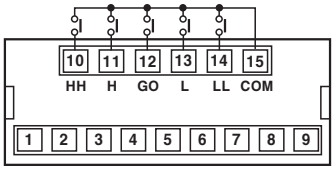

●**MP5W-□1**(Triple relay output)

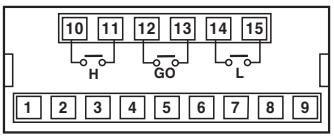

※(★1)It is used for RESET terminal when an operation mode is F13.
※Main output type & sub output type : option

◎Main output+Sub output(Connector)

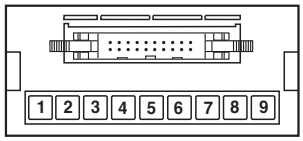

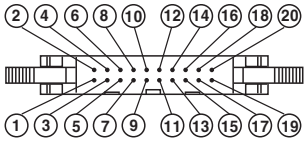

※Hirose connector pin header model of the unit : HIF3BA-20PA-2.54DS
※Contact Hirose Electric to purchase socket and wires of Hirose connector.
[Socket : HIF3BA-20D-2.54R]

●**MP5W-□2/MP5W-□3**(NPN/PNP open collector output + BCD output)

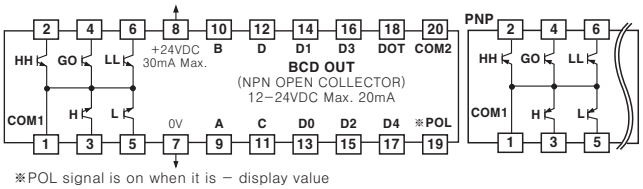

※POL signal is on when it is – display value

●**MP5W-□4/MP5W-□5**
(NPN/PNP Open Collector output + PV transmission output(DC4-20mA) output)

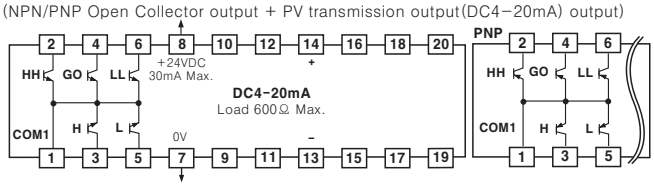

●**MP5W-□6/MP5W-□7**
(NPN/PNP open collector output + Low speed serial output)

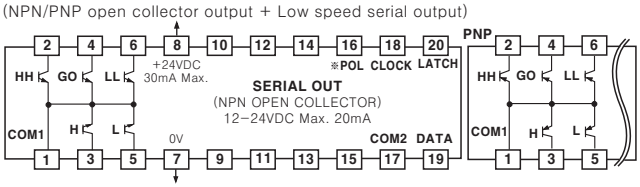

※POL signal is on when it is – display value

●**MP5W-□8/MP5W-□9**
(NPN/PNP open collector output + RS485 communication output)

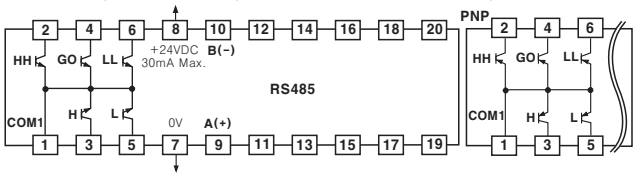

Tacho/speed/pulse(rate) meter(MP5 Series)

▣Specifications(MP5M Series)

Model	MP5M-4N	MP5M-41	MP5M-42
Appearances & Dimensions	CE c UL us [W72×H72×L113mm]		
Power supply	100-240VAC 50/60Hz(Allowable operation voltage : 90 to 110% of power supply)		
Power consumption	Max. 7.5VA(240VAC)	Max. 8VA(240VAC)	
Power for external sensor	12VDC ±10%, 80mA		
Max. display range	0 to 99999		
Display method	7 Segment LED display(Zero blanking type)		
Display period	Selectable 0.05 / 0.5 / 1 / 2 / 4 / 8sec.(It is same with period of output update.)		
Input specification	[Voltage input] High : 4.5-24VDC, Low : 0-1VDC, Input impedance : 4.5kΩ [No voltage input] Impedance at short-circuit : Max. 300Ω, Residual voltage : Max. 1V, Impedance at open-circuit : Min. 100kΩ		
Input frequency	• Solid state input : Max. 50kHz(Pulse width : Each over 10μs) • Contact input : Max. 45Hz(Pulse width : Each over 11ms)		
Operation mode	Number of revolution/Speed/Frequency(F1), Passing time(F2), Cycle(F3), Passing speed(F4), Time interval(F5), Time difference(F6), Absolute rate(F7), Density(F8), Length measurement(F9), Interval(F10), Integration(F11)		
Various display unit	V, V̲, mV, mV̲, kV, A, A̲, mA, mA̲, W, VA, kVA, Var, kVar, kW, ㎠, ㎡, ㎟, ㎤, ㎥, ㎜, ㎝, m, ㎞, ㎛, ㎎, g, ㎏, g/㎤ kg/㎥, sec, min, hour min^{-1}, h^{-1}, sec.1/100s, sec.1/10s, min.1/100m, min.1/10m, min.s.1/10s, h.s.1/10s, h.min.s, h.min, rps, rpm, m/min, ㎥/min, mm/s, m/s^2, rPh, r/s, r/min, r/h, kg/h, ℓ, kℓ, ℓ/s, ℓ/min, ℓ/h, ℓx, lx, Hz, kHz, t, ℃, ℉, Ω, kΩ, MΩ, Pa, kPa, MPa, kgf/㎟, kgf-cm, gf-cm, mmHg, mmH_2O, TON, G, O, K, S, S, s, rad, cal, kcal, L, kL, L/s, L/min, L/h, N, mN, KN, N m, mN·m, KN·m, J, kJ, m/s, ms, t/h, kg/s, PS, hP, dB, %, cPs, cP, cst, deg, φ-mm, sccm, x10, x100, x1000, PH, PPM, counts		
Prescale function	0.0001×10^{-9} to 9.9999×10^{9}		
Hysteresis	———	(※1) 0 to 9999	
Other functions	• Lock setting function • Auto-Zero time setting function • Time unit selection function • Peak value monitoring function • Memory protection function (Mode F11 applied only)	• Lock setting function • Monitoring delay function • Auto-Zero time setting function • Time unit selection function • Peak value monitoring function • Memory protection function (Mode F11 applied only) • High-limit output function(H)	• Lock setting function • Monitoring delay function • Auto-Zero time setting function • Time unit selection function • Peak value monitoring function • Memory protection function (Mode F11 applied only) • Comparative output function(H, L) • Output mode selection fuction (S, H, L, B, I, F) • Deviation memory function (F output mode applied only)
Main output	———	• Relay output : 250VAC 3A resistive load 1c • NPN Open Collecter output : 30VDC 100mA Max.	• Relay output : 250VAC 3A resistive load 1a×2 • NPN Open Collecter output : 30VDC 100mA Max. ×2
Memory protection	No-volatile memory(Input times : Min. 100,000 times)		

※MP5S, MP5Y, MP5W have same function.
(※1) The hysteresis setting range is different by the setting position of decimal point.

▣Connections

●**MP5M-4N**(Indicator)

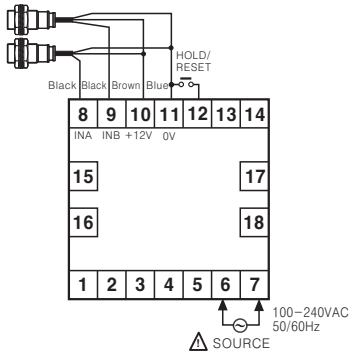

●**MP5M-41**(High-limit setting type)

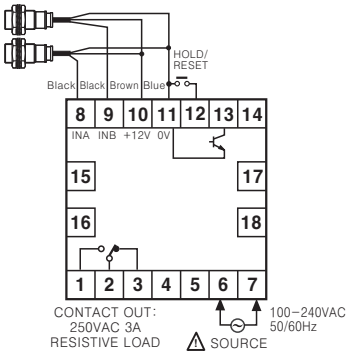

●**MP5M-42**(High/Low-limit setting type)

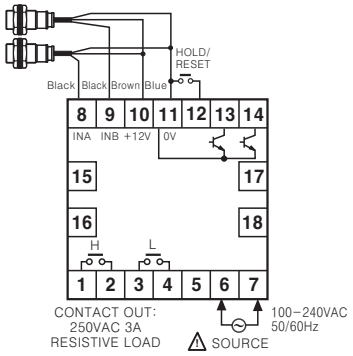

▣Dimensions

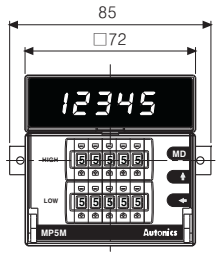

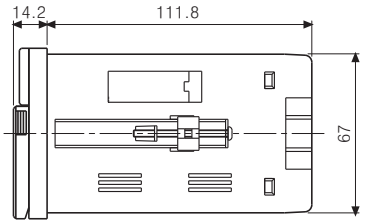

●Panel cut-out

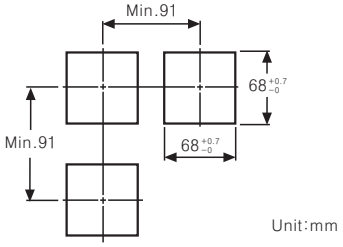

Display unit(D5Y/D5W, D1SC, D1SA, D1AA Series)

▣Ordering information

D 5 W − M X

- Power supply (※1): No mark — 12−24VDC; X — 110/220VAC 50/60Hz(Option)
- Input: M — Multi−input mode
- Size: Y — DIN W72×H36mm; W — DIN W96×H48mm
- Digit: 5 — 99999(5digit)
- Item: D — Display unit

(※1)AC Power of D5W model is optional.

▣Specifications

Model	D5Y-M	D5W-M	D5W-MX
Appearances & Dimensions	[W72×H36×L91mm]	[W96×H48×L99.6mm]	
Digit size	W8×H14.1mm		
Power supply	12−24VDC ±10%	12−24VDC ±10%	110/220VAC 50/60Hz(Option)
Display character	0 to 9, Decimal, − Symbol(When it is serial input)		
Max. response frequency	Max. 5kHz(Except for STATIC input type)		
Input method	BCD : Static, Dynamic, Serial(4/ 5/ 16/ 20/ 25bit)		
Input logic	Selectable positive(PNP) or negative(NPN)		
Input level	High : 5−24VDC, Low : 0−1.2VDC		
Input resistance	22kΩ		

Display FND	Red LED(7 Segment)	Red LED(7 Segment)	Green LED(7 Segment)	Red LED(16 Segment)	Green LED(16 Segment)
Model	D1SC-N	D1SA-RN	※ D1SA-GN	D1AA-RN	※ D1AA-GN
Appearances & Dimensions	[W72×H96×L25.7mm]	[W20×N+12×H33×L56.5mm]		[W20×N+12×H33×L56.5mm]	
Digit size	W31.9×H56.9mm	W11×H20mm			
Power supply	12−24VDC ±10%				
Display character	• Decimal number:0 to 9, Decimal point • Hexa−decimal number:A to F, Decimal point			0 to 9, A to Z, Decimal point, 24 kinds of symbols	
Max. response frequency	Max. 3kHz(Except for STATIC input type)				
Input method	**BCD Code** Parallel:Parallel 4bit binary data, Latch, Zero blank, Decimal point Serial:Serial 4bit or 5bit(Decimal point), Clock, Zero blank, Latch, Decimal point(When not selecting serial DOT)			**BCD Code** Parallel:Parallel 6bit binary data, Latch, Decimal point Serial:Serial 6bit or 7bit(Decimal point), Clock, Latch, Decimal point(When not selecting serial DOT)	
Output	Data out [Serial DATA input case], zero blank out				
Input logic	Selectable positive(PNP) or negative(NPN) by inner switch(SW1)	Selectable positive(PNP) or negative(NPN) by inner soldering			
Input level	Hi:4.5−24VDC, Low:0−1.2VDC				
Input resistance	12kΩ	20kΩ			

※Green LED type is option.

▣Connections(D5Y/D5W series)

●Static input

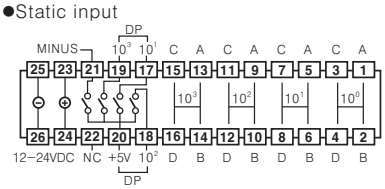

●Dynamic input

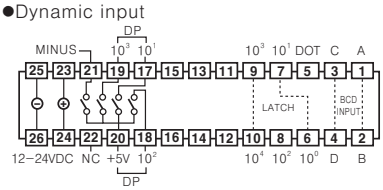

●4/5Bit serial input

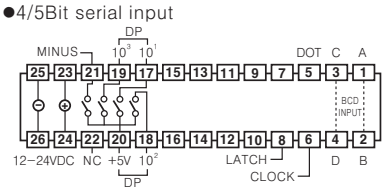

●Serial input

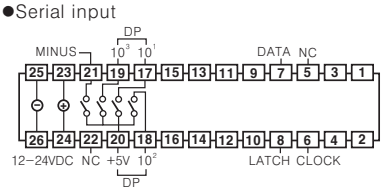

※In case of static input, 5digit cannot be used because of external terminal

※To display 5 digit in dynamic, 4/5 bit serial, serial input, display range is 0 to 99999 and it cannot display minus sign. Therefore, the applied signal to the external MINUS sign input terminal(pin no.21) is ignored.

※Regardless of input logic, connect external DP terminal(pin no.17, 18, 19) or external MINUS sign input terminal(pin no.21) to +5V(pin no.20) and it displays decimal point and minus sign.

●Power terminal for AC power option of D5W series

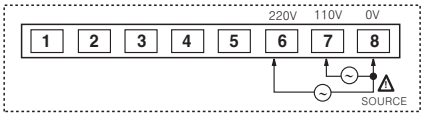

※Above terminal connection diagrams's number set by pin no.1 of hirose connector. Please note that "△" mark indicates pin no.1 of hirose connector.

Multifunctional sensor controller(PA10 Series)

▣Ordering information

PA10 − U □

Input	No mark	NPN input
	P	PNP input
Function	U	High function controller
	V	General purpose controller
	W	2−channel controller
Item	PA10	Power amplifier

▣Specifications(PA10 Series)

Type		High function controller				
Model		**PA10 - U**	**PA10 - V**	**PA10 - VP**	**PA10 - W**	**PA10 - WP**
Appearances & Dimensions		[W38×H76×L82mm]				
Power supply		100−240VAC 50/60Hz				
Allowable operation voltage		90 to 110% of rated voltage				
Power consumption		100VAC 50/60Hz : Approx. 7VA, 240VAC 50/60Hz : Approx. 10VA(Condition:12VDC/200mA)				
Power for external sensor		12VDC ±10% Approx. 200mA				
Input(IN1)(IN2)		Selectable NORM/INV. Selectable OR/AND operation for IN1, IN2 input. Selection function for IN2 derivative action.	Selectable NORM/INV. Operation for IN1, IN2 AND.		Selectable NORM/INV. IN1, IN2 individual operation.	
		NPN input	**NPN input**	**PNP input**	**NPN input**	**PNP input**
Input method		• **PA10-U** [No voltage input]Impedance at short−circuit:Max. 680Ω, Residual voltage at short−circuit:Max. 0.8V, Impedance at open:Min. 100kΩ • **PA10-V/PA10-W** [No voltage input]Impedance at short−circuit:Max. 300Ω, Residual voltage at short−circuit:Max. 2V, Impedance at open:Min. 100kΩ • **PA10-VP/PA10-WP** [Voltage input]Input impedance:5.6kΩ, "H" level voltage:5−30VDC, "L" level voltage:0−2VDC				
Output	Contact output	OUT[250VAC 3A(Resistive load)]			OUT1, OUT2[250VAC 3A(Resistive load)]	
	Solid−state output	O · C OUT1 O · C OUT2	O · C OUT		————	
		NPN open collector output Max. 30VDC 200mA				
Response time		Input : Min. 2μs, Relay contact output : Min. 10ms, Transistor output : Min. 0.5μs(When it is encoder mode)				
Time setting function by each mode ※**Only for PA10-U**	Have	• ON−delay • OFF−delay • Flicker • Flicker one−shot • High−speed detection • Low−speed detection • One−shot delay(0.01 to 0.1 / 0.1 to 1 / 1 to 10 / 10 to 100 sec.)				
	Non	• Normal • Flip−flop • Encoder(Mode 9 to 11)				
Relay life cycle	Mechanical	Min. 10,000,000 times				
	Electrical	Min. 100,000 times(250VAC 3A resistive load)				

※If the load is connected over 200mA at the sensor output, it may cause malfunction.

▣Specifications(PA12 Series)

Type		Power amplifier
Model		**PA-12**
Appearances & Dimensions		[W50×H80×L70mm]
Input type		Selectable NPN/PNP
Power supply		Selectable 110/220VAC 50/60Hz
Control output	Composition	SPDT(1a 1b)
	Capacity	250VAC 3A resistive load
Power for external sensor		12VDC 50mA
Power consumption		Approx. 4VA
Input signal	NPN	High level[H] : 7−12VDC, Low level[L] : 0−5VDC
	PNP	Short−circuit impedance : Max. 1kΩ, Residual voltage : Max. 2VDC, Open−circuit impedance : Min. 100kΩ

▣Connections

●PA10-U

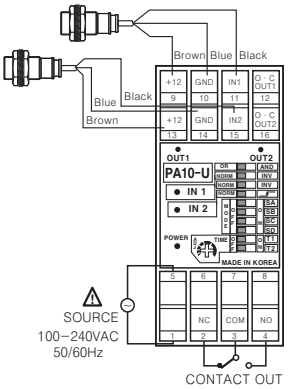

●PA10-V/PA10-VP

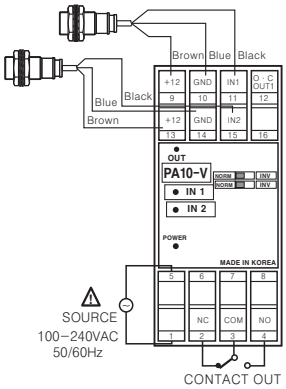

●PA10-W/PA10-WP

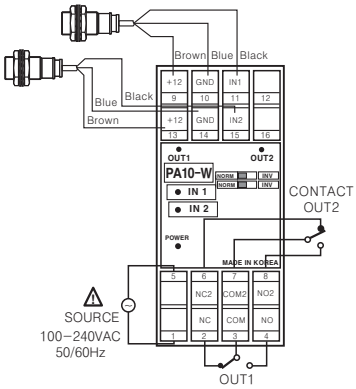

●PA-12

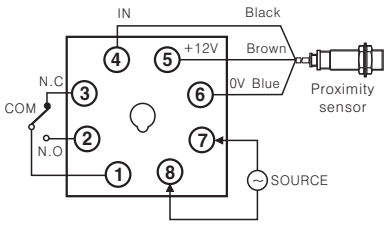

DIN rail mounting type switching power supply(SP Series)

▣Ordering information

SP — 03 24

Output voltage

05	5VDC
12	12VDC
24	24VDC

Output power

03	3W

Item

SP	Switching power supply

▣Specifications

Type		Switching power supply		
Model		**SP-0305**	**SP-0312**	**SP-0324**
Appearances & Dimensions		[W37.5×H85×L65mm]		
Capacity		3W		
Input	Power supply	100-240VAC 50/60Hz		
	Allowable output frequency range	47 to 450Hz		
	Current consumption	Max. 0.15A		
	Efficiency	67 to 74%		
Output	Voltage	5VDC	12VDC	24VDC
	Voltage variable range	Max. ±5%		
	Current	0.6A	0.25A	0.13A
	Ripple	Max. 5%		
	Voltage fluctuation ratio	Max. 0.5%(at 85-264VAC 100% Load)		
	Overcurrent protection	Max. 110%		

▣Front part identification

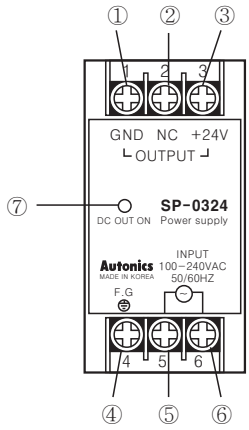

① GND
② NC terminal
③ +V

DC OUTPUT terminal (5VDC, 12VDC, 24VDC)

④ F.G.(Field Ground) terminal

⑤
⑥

SOURCE
100-240VAC 50/60Hz

⑦ Output indicator-DC output is ON, then LED ON

Switching power supply with minimized noise and ripple(SPA Series)

■Ordering information

SPA – 030 – 05

Output voltage	05	5VDC
	12	12VDC
	24	24VDC
Output power	030	30W
	050	50W
	075	75W
	100	100W
Item	SPA	Switching power supply

■Front part identification

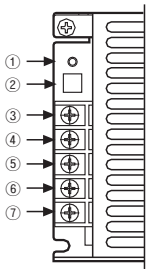

① Output indication LED(Green)
② Output voltage adjuster
③ Output voltage [+]
④ Output voltage [–]
⑤ F.G. terminal
⑥ Input voltage [N]
⑦ Input voltage [L]

■Specifications

Type		Switching mode power supply											
Model		SPA-030-05	SPA-050-05	SPA-030-12	SPA-050-12	SPA-030-24	SPA-050-24	SPA-075-05	SPA-100-05	SPA-075-12	SPA-100-12	SPA-075-24	SPA-100-24
Appearances & Dimensions		CE [W97×H40×L120mm]						[W97×H40×L160mm]					
Input	Voltage (5)	100–240VAC(85–264VAC) 50/60Hz						100–120/ 200–240VAC(85–132/170–264VAC) 50/60Hz					
	Efficiency (1)	Min. 60%	Min. 67%	Min. 74%		Min. 80%		Min. 70%		Min. 78%	Min. 72%	Min. 78%	Min. 80%
	Current consumption (1)	Max. 1.2A	Max. 1.6A	Max. 1.0A	Max. 1.4A	Max. 0.8A	Max. 1.1A	Max. 3.0A		Max. 2.0A	Max. 3.0A	Max. 2.0A	Max. 2.5A
Output charac-teristic	Voltage	5VDC		12VDC		24VDC		5VDC		12VDC		24VDC	
	Current	6A	10A	2.5A	4.2A	1.5A	2.1A	15A	20A	6.3A	8.5A	3.2A	4.2A
	Wattage	30W	50W	30W	50W	30W	50W	75W	100W	75W	100W	75W	100W
	Votage fluctuation range (4)	±5%											
	Input fluctuation (2)	Max. ±0.5%											
	Load fluctuation (1)	Max. ±2%		Max. ±1%				Max. ±2%		Max. ±1%			
	Ripple (1)	Max. ±1%											
	Starting time (1)	Max. 200ms		Max. 150ms				Max. 250ms					
	Holding time (1)	Min. 10ms						Min. 5ms		Min. 10ms	Min. 5ms	Max. 10ms	
Protection function	Inrush current protection	Max. 30A(100VAC) /Max. 40A(240VAC)		Max. 20A (100VAC)				Max. 45A (100VAC) /Max. 50A (240VAC)		Max. 35A (100VAC) /Max. 40A (240VAC)	Max. 45A (100VAC) /Max. 50A (240VAC)	Max. 35A (100VAC) /Max. 40A (240VAC)	
	Overcurrent limit	Min. 110%							Min. 105%	Min. 110%			
	Overvoltage limit	————						6.5V ±10%		16V ±10%		30V ±10%	
	Short circuit protection	Max. 5ms						Max. 10ms		Max. 5ms	Max. 10ms	Max. 5ms	

(※1)100% load for rated input voltage(100VAC).
(※2)Rated input voltage [• SPA–030/050 Series : 100–240VAC(85–264VAC) • SPA–075/100 Series : 100–120/200–240(85–132/170–264VAC)] under 100% of load.
SPA–100–05 is under 100% of load for [100–120/200–240VAC(100–132/190–264VAC)].
(※3)Rated input voltage(100VAC). (※4)Vary voltage by output voltage adjuster, it is changed over voltage variation range(±5%).
(※5)The rated input volatge of SPA–100–05 is 100–120/200–240VAC(100–132/190–264VAC).

■Dimensions

• SPA-030/050 Series

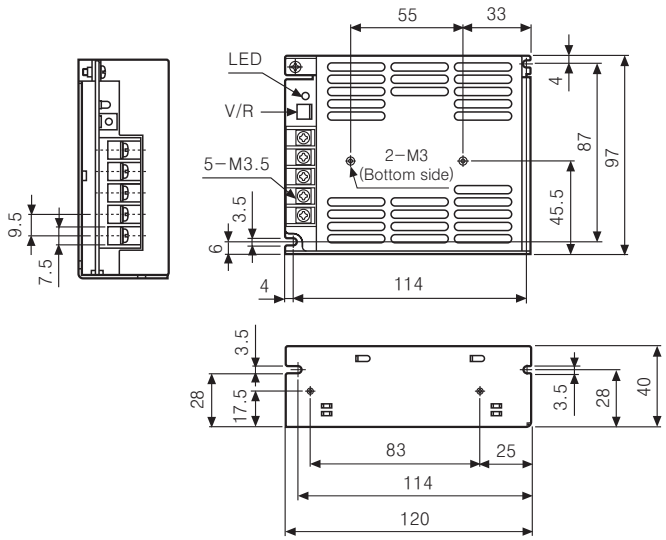

• SPA-075/100 Series

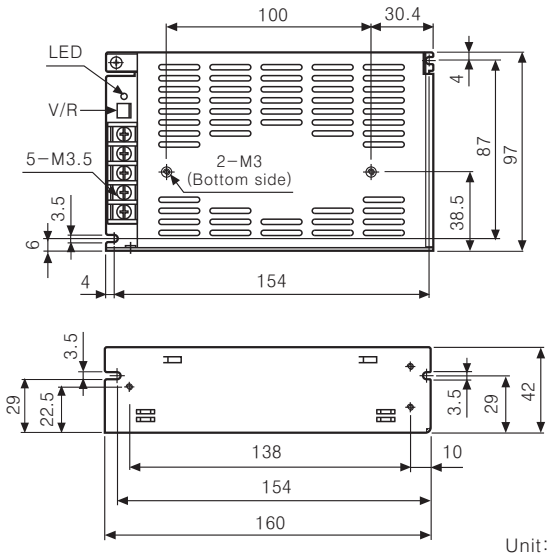

Unit:mm

5-phase stepping motor

▣Ordering information

●Application model : Shaft type, Hollow shaft type, shaft type+Brake built-in type

A □ □K - S 5 4 4 □ - □ □

Brake built-in (※1)	No mark	Standard type
	B	Brake built-in type
Wire connection	No mark	Pentagon wiring
	S	Standard wiring(Option)
Motor shaft (※1)	No mark	Single shaft
	W	Dual shaft
Motor length(mm)	3	30.5 mm
	5	46.5 mm
	3	33 mm
	4	39 mm
	5	47 mm
	4	48.5 mm
	6	59.5 mm
	9	89 mm
	6	68 mm
	9	98 mm
	13	128 mm
Motor frame size(mm)	2	24mm (24mm×24mm)
	4	42mm (42mm×42mm)
	6	60mm (60mm×60mm)
	9	85mm (85mm×85mm)
Motor phase	5	5 phase
Rated current	S	0.75A / Phase
	M	1.4 A/ Phase
	G	2.8 A/ Phase
Max. holding torque	Square	kgf · cm(Refer to motor specification)
Motor type	No mark	Shaft type
	H	Hollow shaft type
Item	Series	

(※1) Brake built-in type provides single shaft type only.

●Application model : Geared built-in type, Geared+Brake built-in type, Rotary actuator, Rotary actuator+Brake built-in type

A □K - S 5 4 5 □ - G 5

Gear ratio	5	1 : 5		
	7.2	1 : 7.2		
	10	1 : 10		
Features	G	Geared built-in type		
	GB	Geared-Brake built-in type		
	R	Rotary actuator built-in type		
	RB	Rotary actuator-Brake built-in type		
Motor shaft	No mark	Single shaft		
	W	Dual shaft		
Motor length(mm)	5	47mm		
	6	59.5mm		
	9	98mm		
Motor frame size	4	42mm		
	6	60mm		
	9	85mm		
Motor phase	5	5 Phase		
Rated current	S	0.75A/Phase		
	M	1.4A/Phase		
	G	2.8A/Phase		
Max. holding torque	10	10kgf · cm	50	50kgf · cm
	15	15kgf · cm	140	140kgf · cm
	35	35kgf · cm	200	200kgf · cm
	40	40kgf · cm		
Item	Series			

5-phase stepping motor

▣Specifications

Type		Model	A/phase (A)	Max. holding torque (kgf • cm)	Max. allowable torque (kgf • cm)	Moment of rotor inertia (g • cm²)	Winding resistance(Ω)	Motor length (mm)
24 Square	Shaft type	02K-S523(W)	0.75	0.18	–	4.2	1.1	30.5
		04K-S525(W)	0.75	0.28	–	8.2	1.7	46.5
42 Square	Shaft type	A1K-S543(W)	0.75	1.3	–	35	1.7	33
		A2K-S544(W)	0.75	1.8	–	54	2.2	39
		A2K-M544(W)	1.4	1.8	–	54	2.2	39
		A3K-S545(W)	0.75	2.4	–	68	2.2	47
	Hollow shaft type	AH1K-S543	0.75	1.3	–	35	1.7	33
		AH2K-S544	0.75	1.8	–	54	2.2	39
		AH3K-S545	0.75	2.4	–	68	2.2	47
	Geared built-in type	A10K-S545(W)-G5	0.75	–	10	68	1.7	74.5
		A15K-S545(W)-G7.2	0.75	–	15	68	2.2	74.5
		A15K-S545(W)-G10	0.75	–	15	68	2.2	74.5
60 Square	Shaft type / Shaft + Brake built-in type	A4K-S564(W)-B	0.75	4.2	–	175	2.6	48.5
		A4K-M564(W)-B	1.4	4.2	–	175	0.8	48.5
		A8K-S566(W)-B	0.75	8.3	–	280	4.0	59.5
		A8K-M566(W)-B	1.4	8.3	–	280	1.1	59.5
		A16K-M569(W)-B	1.4	16.6	–	560	1.8	89
		A16K-G569(W)-B	2.8	16.6	–	560	0.56	89
	Hollow shaft type	AH4K-S564(W)	0.75	4.2	–	175	2.6	48.5
		AH4K-M564(W)	1.4	4.2	–	175	0.8	48.5
		AH8K-S566(W)	0.75	8.3	–	280	4.0	59.5
		AH8K-M566(W)	1.4	8.3	–	280	1.1	59.5
		AH16K-M569(W)	1.4	16.6	–	560	1.8	89
		AH16K-G569(W)	2.8	16.6	–	560	0.56	89
	Geared built-in type	A35K-M566(W)-G5	1.4	–	35	280	1.1	94.5
		A40K-M566(W)-G7.2	1.4	–	40	280	1.1	94.5
		A50K-M566(W)-G10	1.4	–	50	280	1.1	94.5
	Geared + Brake built-in type	A35K-M566-GB5	1.4	–	35	280	1.1	136
		A40K-M566-GB7.2	1.4	–	40	280	1.1	136
		A50K-M566-GB10	1.4	–	50	280	1.1	136
	Rotary actuator type	A35K-M566(W)-R5	1.4	–	35	280	1.1	93.5
		A40K-M566(W)-R7.2	1.4	–	40	280	1.1	93.5
		A50K-M566(W)-R10	1.4	–	50	280	1.1	93.5
	Rotary actuator + Brake built-in type	A35K-M566-RB5	1.4	–	35	280	1.1	136
		A40K-M566-RB7.2	1.4	–	40	280	1.1	136
		A50K-M566-RB10	1.4	–	50	280	1.1	136
85 Square	Shaft type / Shaft + Brake built-in type	A21K-M596(W)-B	1.4	21	–	1400	1.76	68
		A21K-G596(W)-B	2.8	21	–	1400	0.4	68
		A41K-M599(W)-B	1.4	41	–	2700	2.6	98
		A41K-G599(W)-B	2.8	41	–	2700	0.58	98
		A63K-M5913(W)-B	1.4	63	–	4000	3.92	128
		A63K-G5913(W)-B	2.8	63	–	4000	0.86	128
	Hollow shaft type	AH21K-M596(W)	1.4	21	–	1400	1.76	68
		AH21K-G596(W)	2.8	21	–	1400	0.4	68
		AH41K-M599(W)	1.4	41	–	2700	2.6	98
		AH41K-G599(W)	2.8	41	–	2700	0.58	98
		AH63K-M5913(W)	1.4	63	–	4000	3.92	128
		AH63K-G5913(W)	2.8	63	–	4000	0.86	128
	Geared built-in type	A140K-M599(W)-G5	1.4	–	140	2700	2.6	145
		A140K-G599(W)-G5	2.8	–	140	2700	0.58	145
		A200K-M599(W)-G7.2	1.4	–	200	2700	2.6	145
		A200K-G599(W)-G7.2	2.8	–	200	2700	0.58	145
		A200K-M599(W)-G10	1.4	–	200	2700	2.6	145
		A200K-G599(W)-G10	2.8	–	200	2700	0.58	145
	Geared + Brake built-in type	A140K-M599-GB5	1.4	–	140	2700	2.6	182
		A140K-G599-GB5	2.8	–	140	2700	0.58	182
		A200K-M599-GB7.2	1.4	–	200	2700	2.6	182
		A200K-G599-GB7.2	2.8	–	200	2700	0.58	182
		A200K-M599-GB10	1.4	–	200	2700	2.6	182
		A200K-G599-GB10	2.8	–	200	2700	0.58	182

※**(W)** stands for dual shaft of motor. The brake built-in type provides single shaft type only.
※Motor length was measured without shaft.
※Hollow shaft type with standard wiring is customizable.(Except for 24mm)

Shaft/Brake/Hollow shaft type 5-phase stepping motor(AK/AHK Series)

■Dimensions

※This dimension is for dual shaft type. There is no shaft at (·····) part in single shaft type.

Unit:mm

◎□24

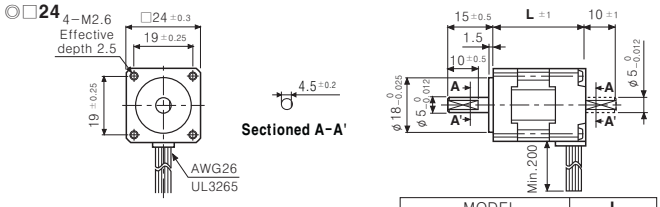

MODEL	L
02K-S523(W)	30.5
04K-S525(W)	46.5

◎□42

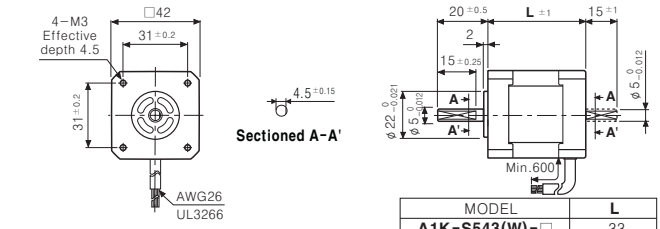

MODEL	L
A1K-S543(W)-□	33
A2K-□544(W)-□	39
A3K-S545(W)-□	47

◎□60

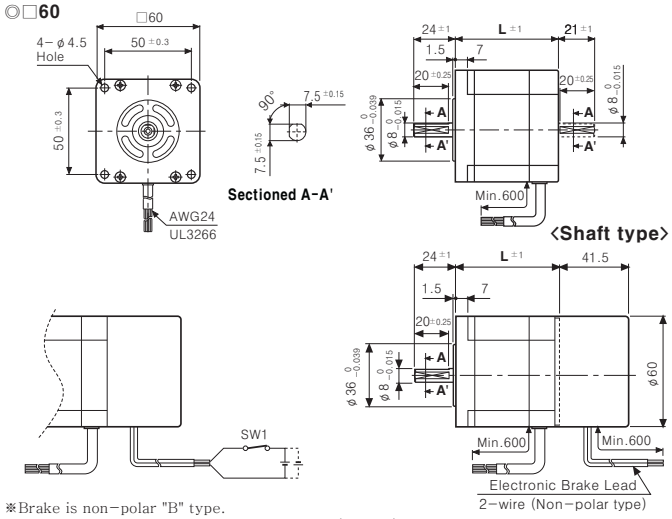

<Shaft type>

<Brake built-in type>

※Brake is non-polar "B" type.
Be sure to observe rated excitation voltage (24VDC).
※SW1 ON-Brake release
SW1 OFF-Brake execute

MODEL	L
A4K-□564(W)-□B	48.5
A8K-□566(W)-□B	59.5
A16K-□569(W)-□B	89

◎□85

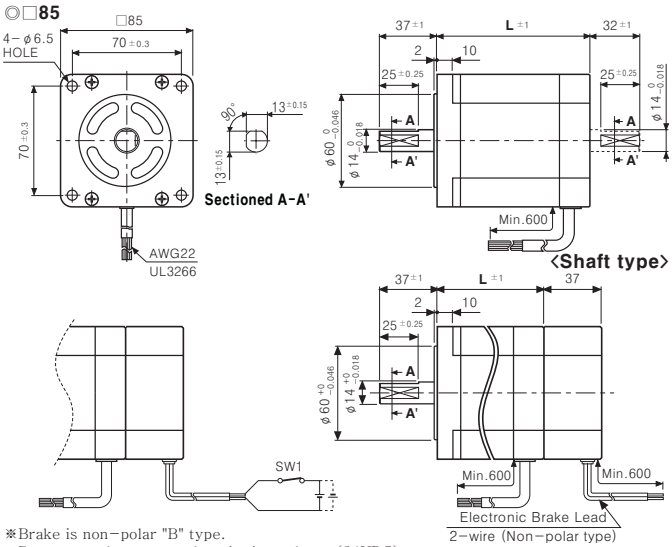

<Shaft type>

<Brake built-in type>

※Brake is non-polar "B" type.
Be sure to observe rated excitation voltage (24VDC).
※SW1 ON-Brake release
SW1 OFF-Brake execute

MODEL	L
A21K-□596(W)-□B	68
A41K-□599(W)-□B	98
A63K-□5913(W)-□B	128

◎□42

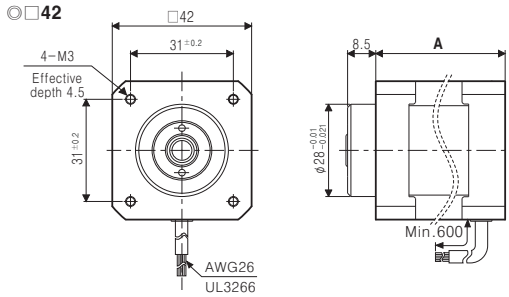

●Hole dimensions

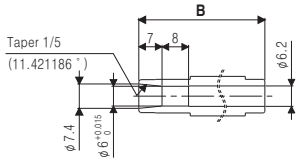

MODEL	A	B
AH1K-S543	33	38
AH2K-S544	39	44
AH3K-S545	47	52

◎□60

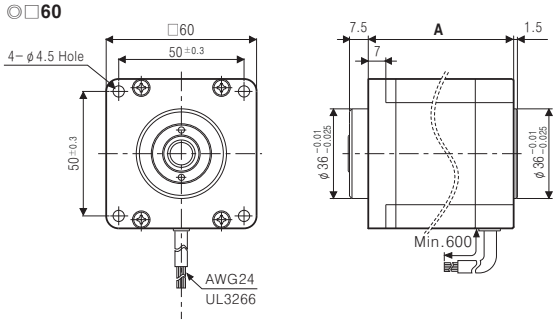

●Hole dimensions

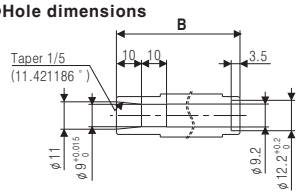

MODEL	A	B
AH4K-□564	48.5	49.3
AH8K-□566	59.5	60.3
AH16K-□569	89	89.8

◎□85

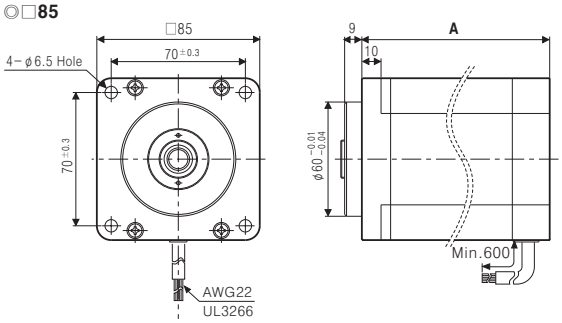

※Depending on processing of shaft to be assembled, hollow shaft type can be used both single and dual shaft.

●Hole dimensions

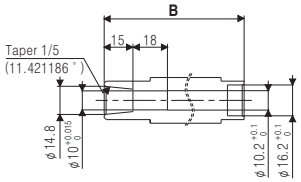

MODEL	A	B
AH21K-□596	68	73
AH41K-□599	98	102.5
AH63K-□5913	128	133

▣Specifications

Brake type 5-phase stepping motor(AK-B Series)

Frame size	Model	Appearances	Max. holding torque(kgf • cm)	Basic step angle	Rated current [A/Phase]	Rotor inertia (g • cm²)	Brake power
60 Square	A4K-S564-B	CE	4.2	0.72° (Full step) / 0.36° (Half step)	0.75	0.175	24VDC (Non-polarity)
	A4K-M564-B				1.4		
	A8K-S566-B		8.3		0.75	0.28	
	A8K-M566-B				1.4		
	A16K-S569-B		16.6		0.75	0.56	
	A16K-M569-B				1.4		
85 Square	A21K-M596-B	CE	21		1.4	1.4	
	A21K-G596-B				2.8		
	A41K-M599-B		41		1.4	2.7	
	A41K-G599-B				2.8		
	A63K-M5913-B		63		1.4	4.0	
	A63K-G5913-B				2.8		

Geared type 5-phase stepping motor(AK-G Series)

Frame size	Model	Appearances	Gear ratio	Max. holding torque(kgf • cm)	Rated current [A/Phase]	Basic step angle	Allowable speed(rpm)	Back lash
42 Square	A10K-S545(W)-G5	CE	1:5	10	0.75	0.144°	0 to 360	±35° (0.58°)
	A15K-S545(W)-G7.2		1:7.2	15		0.1°	0 to 250	
	A15K-S545(W)-G10		1:10	15		0.072°	0 to 180	
60 Square	A35K-M566(W)-G5	CE	1:5	35	1.4	0.144°	0 to 360	±20° (0.33°)
	A40K-M566(W)-G7.2		1:7.2	40		0.1°	0 to 250	
	A50K-M566(W)-G10		1:10	50		0.072°	0 to 180	
85 Square	A140K-M599(W)-G5	CE	1:5	140		0.144°	0 to 360	±15° (0.25°)
	A200K-M599(W)-G7.2		1:7.2	200		0.1°	0 to 250	
	A200K-M599(W)-G10		1:10	200		0.072°	0 to 180	
	A140K-G599(W)-G5		1:5	140	2.8	0.144°	0 to 360	
	A200K-G599(W)-G7.2		1:7.2	200		0.1°	0 to 250	
	A200K-G599(W)-G10		1:10	200		0.072°	0 to 180	

※( ) indicates dual shaft of motor.

Geared+Brake type 5-phase stepping motor(AK-GB Series)

Frame size	Model	Appearances	Gear ratio	Max. holding torque(kgf • cm)	Rated current [A/Phase]	Basic step angle	Allowable speed(rpm)	Back lash	Brake power
60 Square	A35K-M566-GB5	CE	1:5	35	1.4	0.144°	0 to 360	±20° (0.33°)	24VDC (Non-polarity
	A40K-M566-GB7.2		1:7.2	40		0.1°	0 to 250		
	A50K-M566-GB10		1:10	50		0.072°	0 to 180		
85 Square	A140K-M599-GB5	CE	1:5	140		0.144°	0 to 360	±15° (0.25°)	
	A200K-M599-GB7.2		1:7.2	200		0.1°	0 to 250		
	A200K-M599-GB10		1:10	200		0.072°	0 to 180		
	A140K-G599-GB5		1:5	140	2.8	0.144°	0 to 360		
	A200K-G599-GB7.2		1:7.2	200		0.1°	0 to 250		
	A200K-G599-GB10		1:10	200		0.072°	0 to 180		

Rotary actuator type 5-phase stepping motor(AK-R Series)
Rotary actuator+Brake type 5-phase stepping motor(AK-RB Series)

Frame size	Model	Appearances	Gear ratio	Max. holding torque(kgf • cm)	Rated current [A/Phase]	Basic step angle	Allowable speed(rpm)	Bake lash	Brake power
60 Square	A35K-M566(W)-R5	CE	1:5	35	1.4	0.144°	0 to 360	±20° (0.33°)	24VDC (Non-polarity)
	A40K-M566(W)-R7.2		1:7.2	40		0.1°	0 to 250		
	A50K-M566(W)-R10		1:10	50		0.072°	0 to 180		
	A35K-M566-RB5	CE	1:5	35		0.144°	0 to 360		
	A40K-M566-RB7.2		1:7.2	40		0.1°	0 to 250		
	A50K-M566-RB10		1:10	50		0.072°	0 to 180		

※( ) indicates dual shaft of motor.

Geared/Geared+Brake/Rotary actuator/Rotary actuator+Brake type 5-phase stepping motor(AK-G/AK-GB/AK-R/AK-RB Series)

▣Dimensions

※This dimension is for dual shaft type. There is no shaft at sectioned B(·····) part in single shaft type.

Unit:mm

◎□42

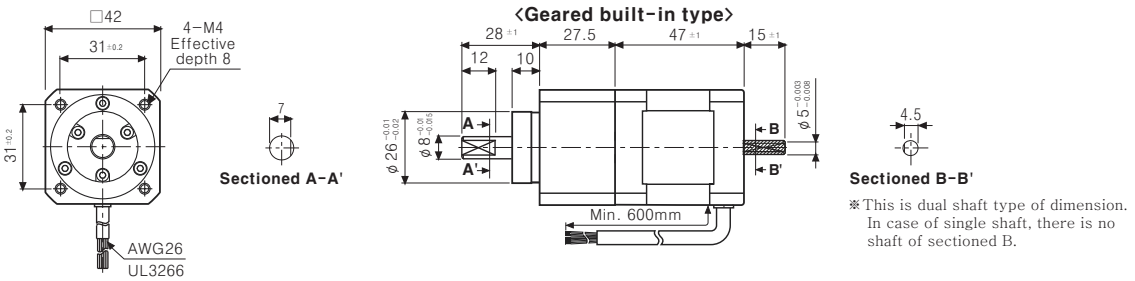

※This is dual shaft type of dimension. In case of single shaft, there is no shaft of sectioned B.

◎□60

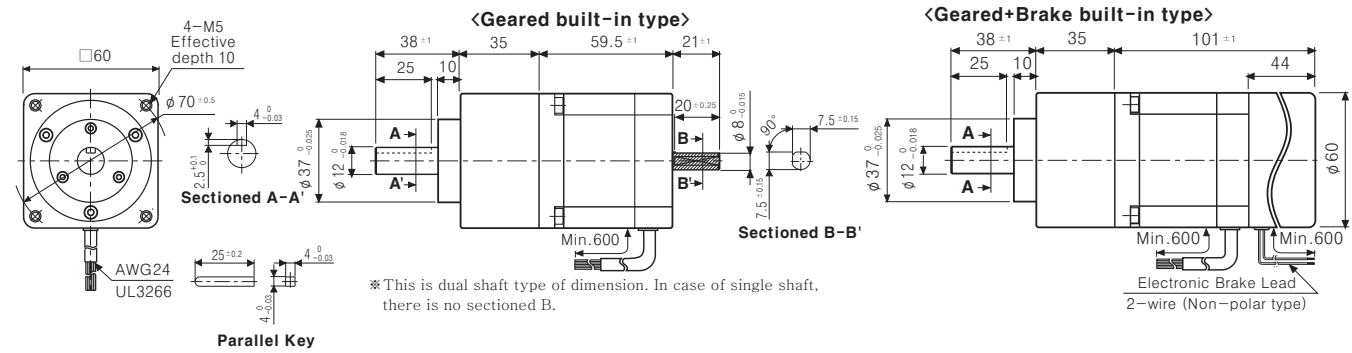

※This is dual shaft type of dimension. In case of single shaft, there is no sectioned B.

◎□60

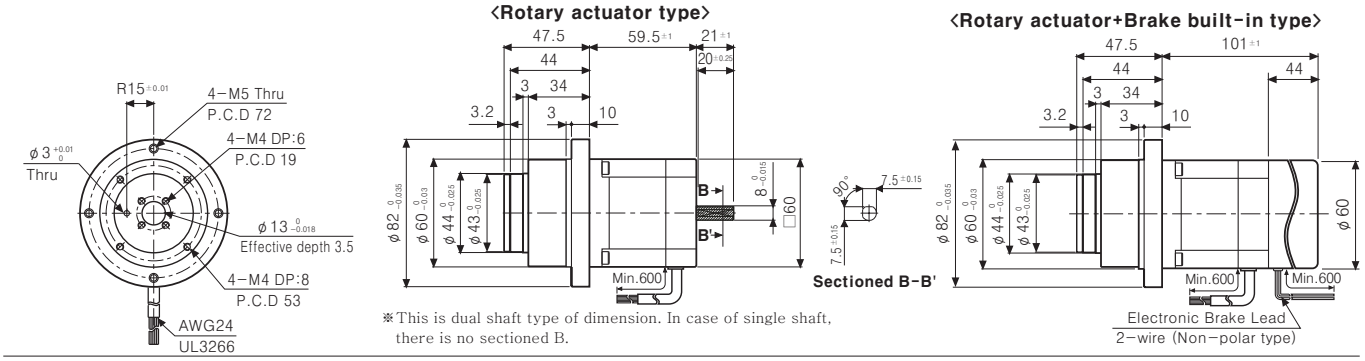

※This is dual shaft type of dimension. In case of single shaft, there is no sectioned B.

◎□85

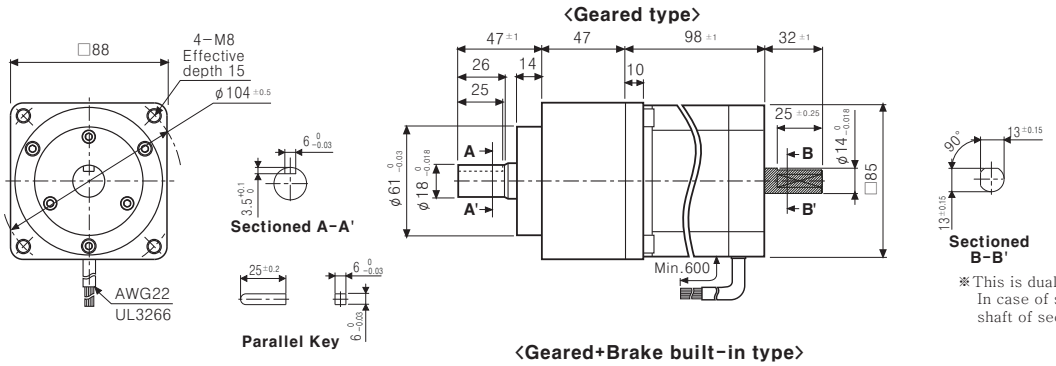

※This is dual shaft type of dimension. In case of single shaft, there is no shaft of sectioned B.

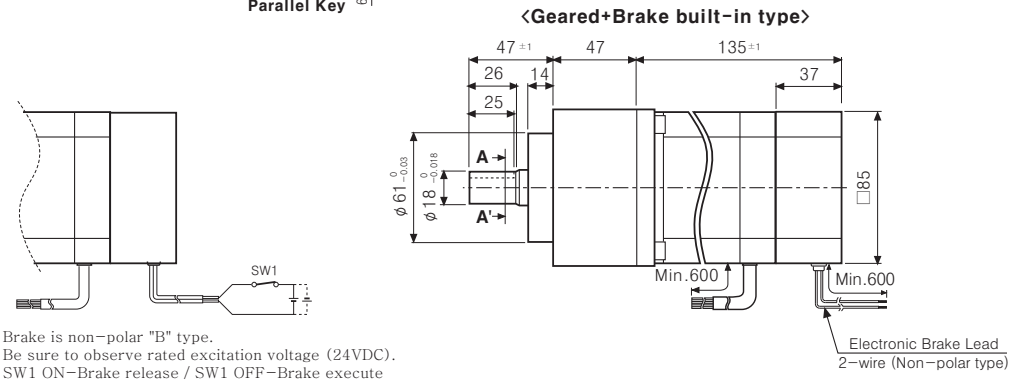

※Brake is non-polar "B" type.
Be sure to observe rated excitation voltage (24VDC).
※SW1 ON-Brake release / SW1 OFF-Brake execute

5-phase stepping motor driver(MD5 Series)

▣Ordering information

MD 5 – H F 14 – □

Output	No mark	Zero point excitation output(※1)
	AO	Alarm output
RUN current	14	1.4A/Phase
	28	2.8A/Phase
Power supply	D	20–35VDC
	F	100–240VAC
Step type (Resolution)	H	Microstep(250divisions)
	N	Normal step
Motor phase	5	5–Phase
Item	MD	Motor driver

(※1) Except MD5–ND14

▣Specifications

Model	MD5-HD14	MD5-HF14	MD5-HF14-AO	MD5-HF28	MD5-ND14
Appearances & Dimensions	[W105×H76.5×L39.5mm]	[W170×H134.3×L42mm]		[W200×H146×L49mm]	[W93×H45×L32mm]
Power supply	(※1) 20–35VDC 3A	100–220VAC 50/60Hz			20–35VDC 3A
RUN current	0.4 to 1.4A / Phase			1.0 to 2.8A / Phase	0.5 to 1.5A / Phase
RUN method	Bipolar constant pentagon drive				
Basic step angle	0.72 ° / 1Phase				
Resolution	1, 2, 4, 5, 8, 10, 16, 20, 25, 40, 50, 80, 100, 125, 200, 250 division (0.72 ° to 0.00288 ° / 1Phase)				1, 2 division (0.72°, 0.36°/ 1Phase)
Input pulse width	Min. 0.5㎲				Min. 10㎲
Input pulse interval	Max. 50%				
Rising/Falling time	Max. each 120ns				
Input pulse frequency	(※2) 1MHz				50kHz
Input voltage	High : 4–8VDC, Low : 0–0.5VDC				
Input resistance	270Ω (CW, CCW) 390Ω (HOLD OFF, DIVISION SELECTION)		270Ω (CW, CCW) 390Ω (HOLD OFF)	270Ω (CW, CCW) 390Ω (HOLD OFF, DIVISION SELECTION)	390Ω (CW, CCW, HOLD OFF)
Ambient temperature	0 to 40℃ (at non–freezing status)	0 to 50℃ (at non–freezing status)		0 to 40℃ (at non–freezing status)	

※(※1)When using over 30VDC, it should be mounted at ventilated place due to increasing heat.
※(※2)Max. pull–out frequency and max. slewing frequency are variable depending on resoultion, or load.

▣Connections

◎MD5-HD14

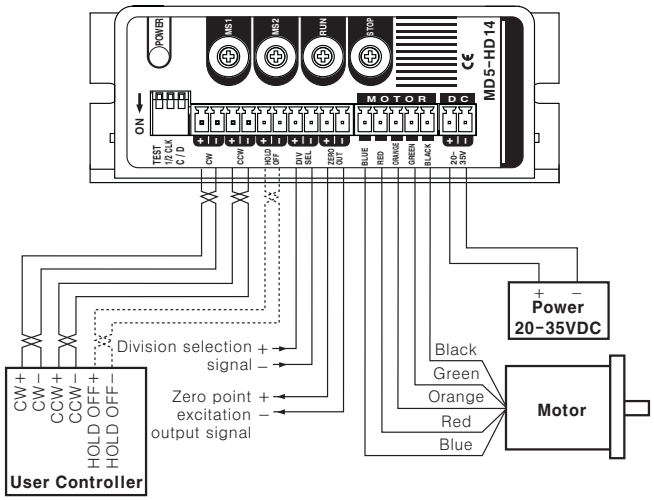

▣Dimensions

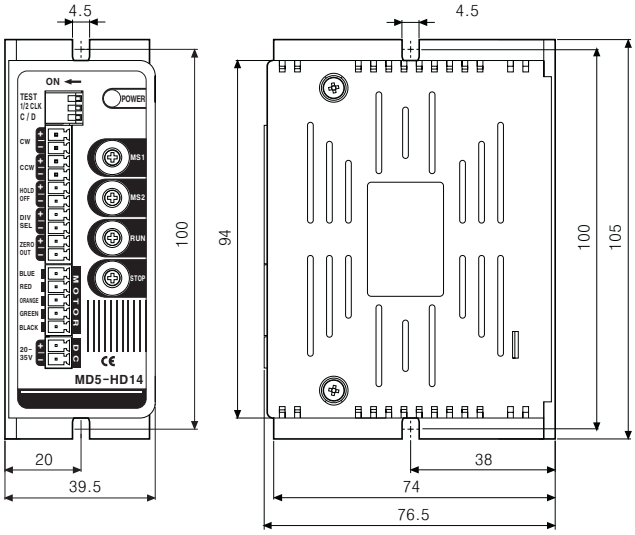

(Note) Add external resistance when power for pulse from the external of the unit exceeds +5V. (Input current:10 to 20mA)

(Unit:mm)

5-phase stepping motor driver(MD5 Series)

▣Connections

◎MD5-HF14

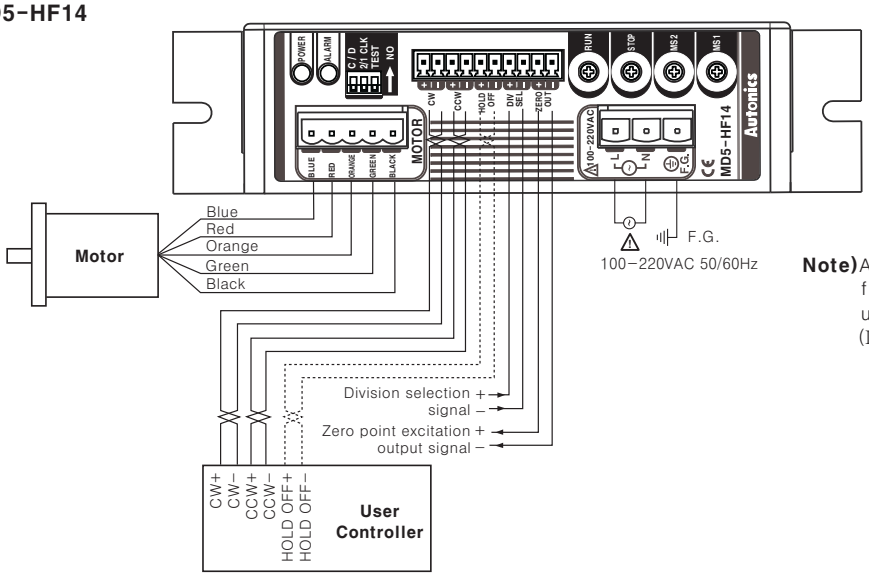

Note) Add external resistance when power for pulse from the external of the unit exceeds +5V.
(Input current:10 to 20mA)

◎MD5-HF14-AO

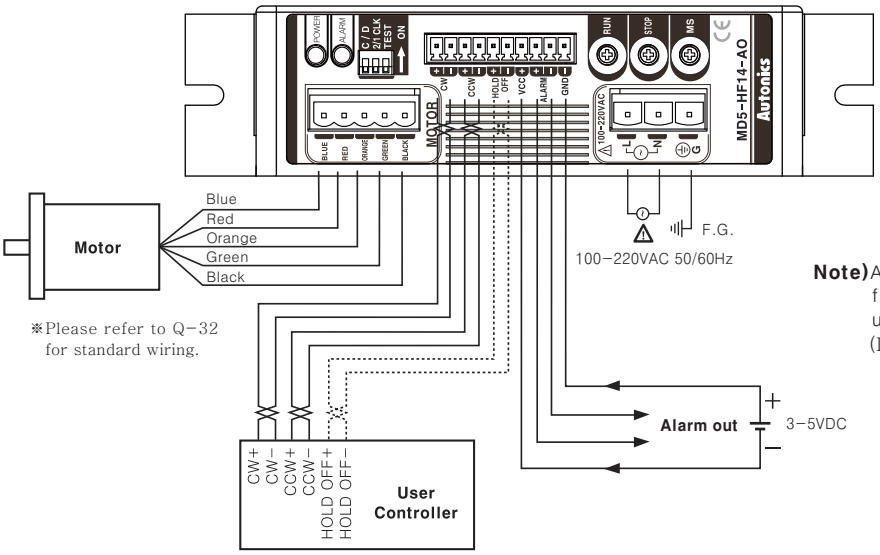

Note) Add external resistance when power for pulse from the external of the unit exceeds +5V.
(Input current:10 to 20mA)

▣Dimensions

◎MD5-HF14

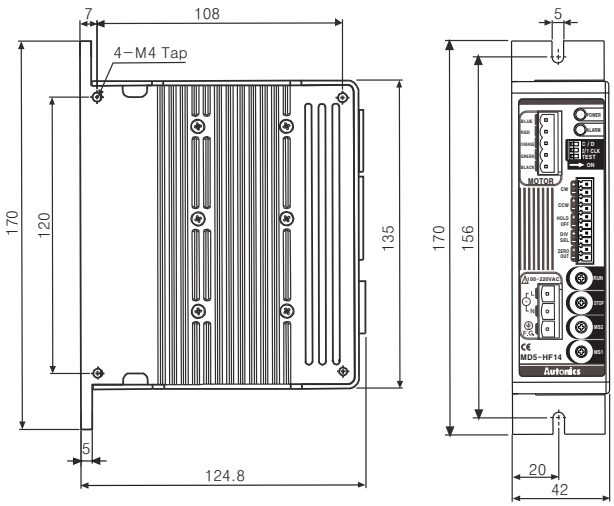

◎MD5-HF14-AO

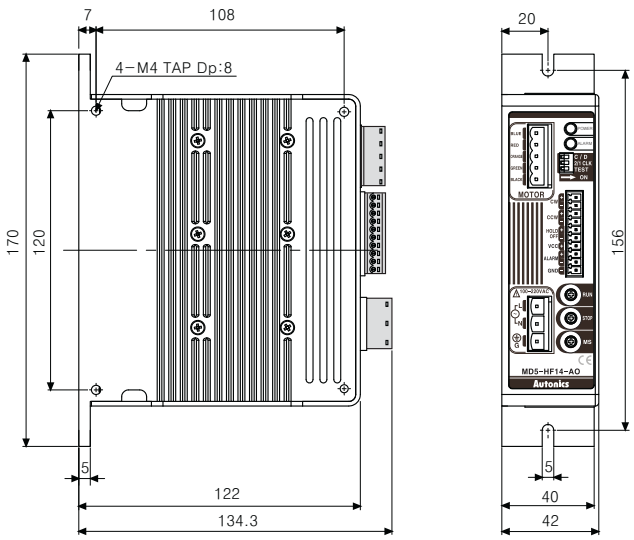

Unit:mm

5-phase stepping motor driver(MD5 Series)

▣Connections

◎MD5-HF28

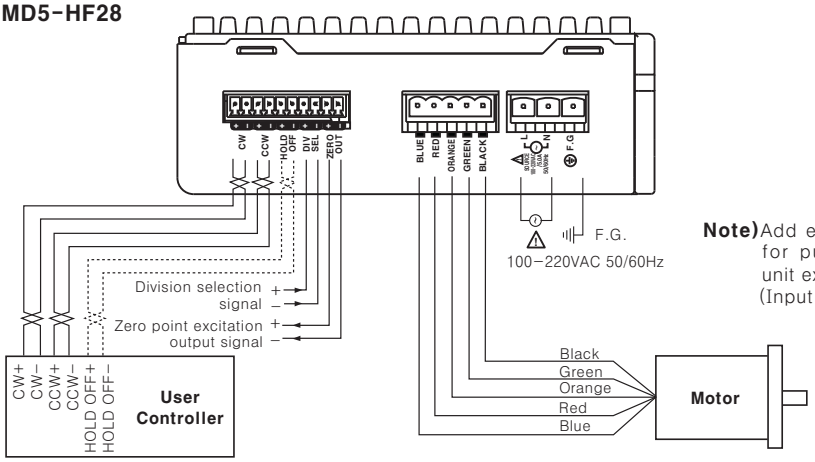

Note) Add external resistance when power for pulse from the external of the unit exceeds +5V.
(Input current:10 to 20mA)

▣Dimensions

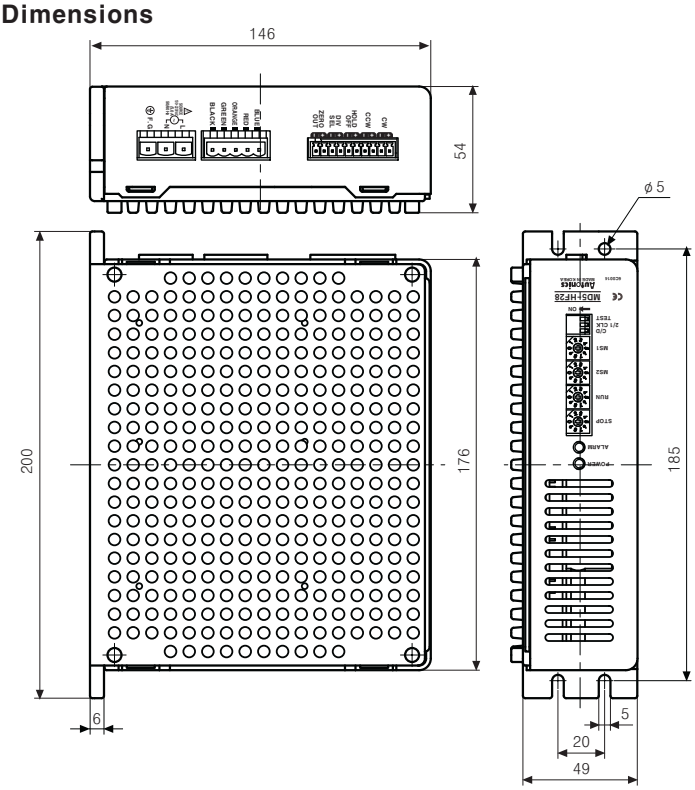

Unit:mm

▣Connections

◎MD5-ND14

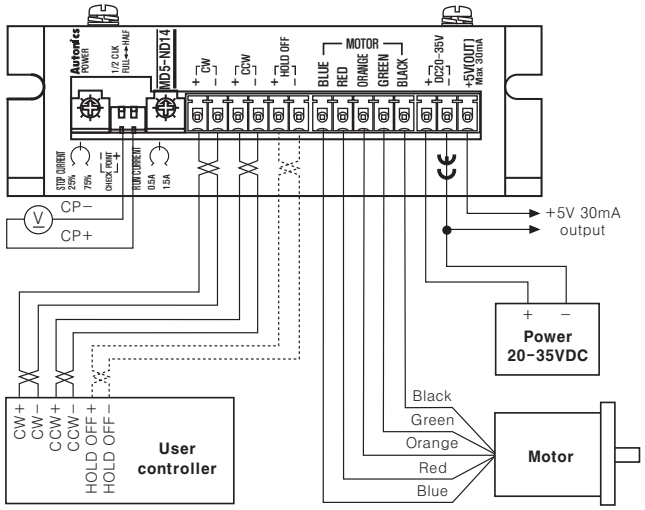

▣Dimensions

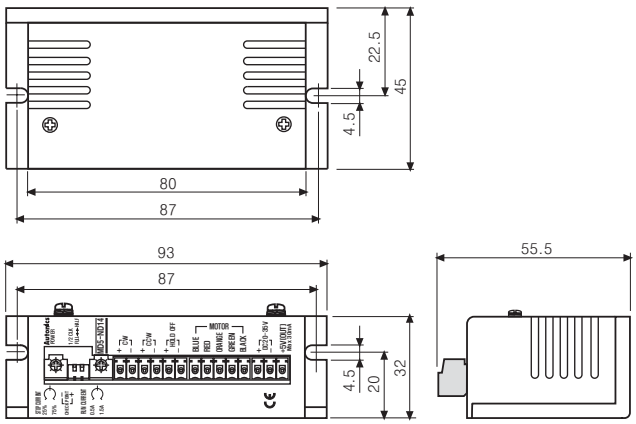

Note) Add external resistance when power for pulse from the external of the unit exceeds +5V. (Input current:10 to 20mA)

Unit:mm

5-phase stepping motor driver(MD5-HD14-2X, 3X)

▣Ordering information

MD 5 – H D 14 – 2X

Axis	2X	2-Axis
	3X	3-Axis
RUN current	14	1.4A/Phase
Power supply	D	20-35VDC
Step type (Resolution)	H	Microstep(250divisions)
Motor phase	5	5-Phase
Item	MD	Motor driver

※Bulit-in zero point excitation output signal is optional.

▣Specifications

Model	MD5-HD14-2X	MD5-HD14-3X
Appearances & Dimensions	CE KC [W190×H80×L40mm]	CE KC 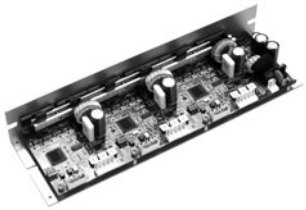 [W260×H80×L40mm]
Power supply	(※1) 20-35VDC 5A Max. (-10%, +20%)	20-35VDC 7A Max. (-10%, +20%)
RUN current	0.4 to 1.4A / Phase	
RUN method	Bipolar constant current pentagon drive	
Basic step angle	0.72 ˚ / 1Phase	
Resolution	1, 2, 4, 5, 8, 10, 16, 20, 25, 40, 50, 80, 100, 125, 200, 250 division (0.72 ˚ to 0.00288 ˚ / 1Phase)	
Input pulse width	Min. 0.5㎲	
Input pulse interval	Max. 50%	
Rising/Falling time	Max. each 120ns	
Input pulse frequency	1MHz	
Input voltage	High : 4-8VDC, Low : 0-0.5VDC	
Input resistance	270Ω (CW, CCW), 390Ω (HOLD OFF)	
Ambient temperature	0 to 40℃ (at non-freezing status)	

(※1) When using over 30VDC, it should be mounted at ventilated place due to increasing heat.

▣Input・Output diagram

<MD5-HD14-2X/3X Driver inner circuit>

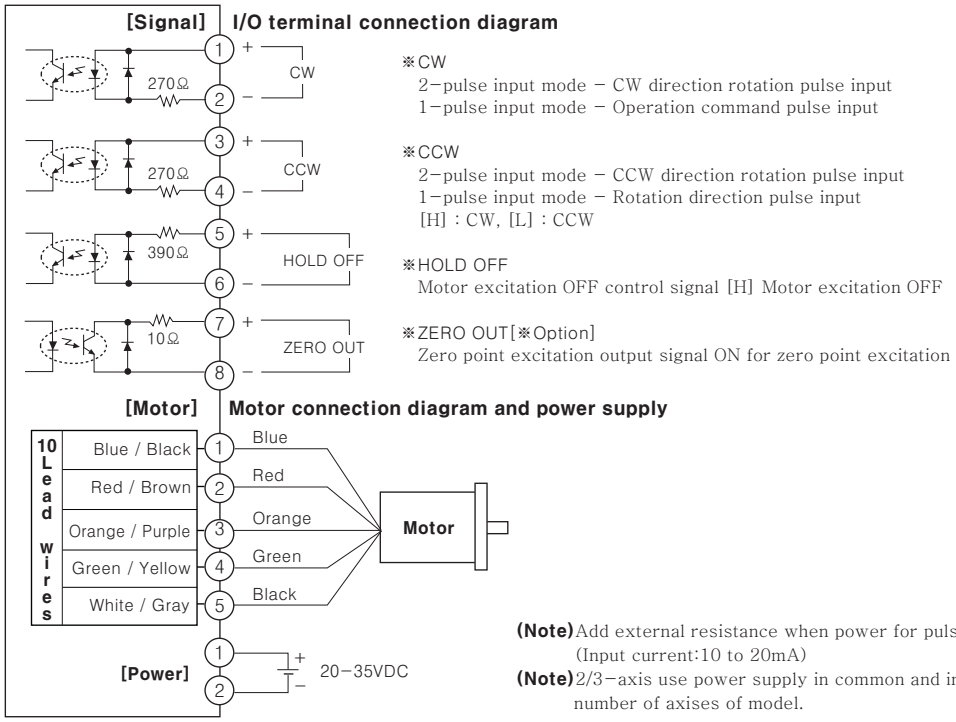

(Note) Add external resistance when power for pulse from the external of the unit exceeds +5V. (Input current:10 to 20mA)

(Note) 2/3-axis use power supply in common and input/output terminals are proportional to the number of axises of model.

5-phase stepping motor driver(MD5-HD14-2X, 3X)

▣Dimensions

◎MD5-HD14-2X

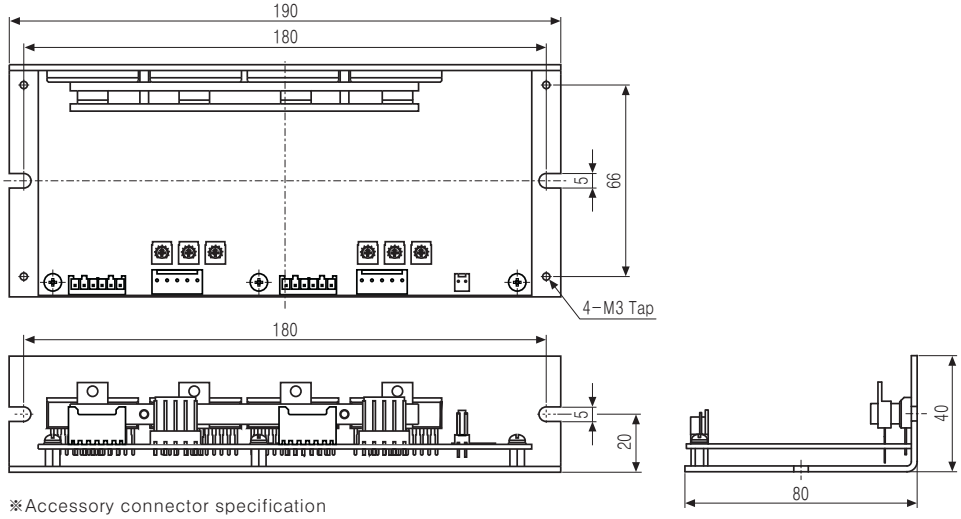

※Accessory connector specification

	Connector		Qty
	Manufacturer	Model No.	
Power 2P Housing	Yeonho electronics	YH396-02V	1
Motor 5P Housing	Yeonho electronics	YH396-05V	2
Signal 6P Housing	JST	XAP-06V-1	2
Power/Motor Terminal Pin	Yeonho electronics	YT396	12
Signal Terminal Pin	JST	SXA-001T-P0.6	12

◎MD5-HD14-3X

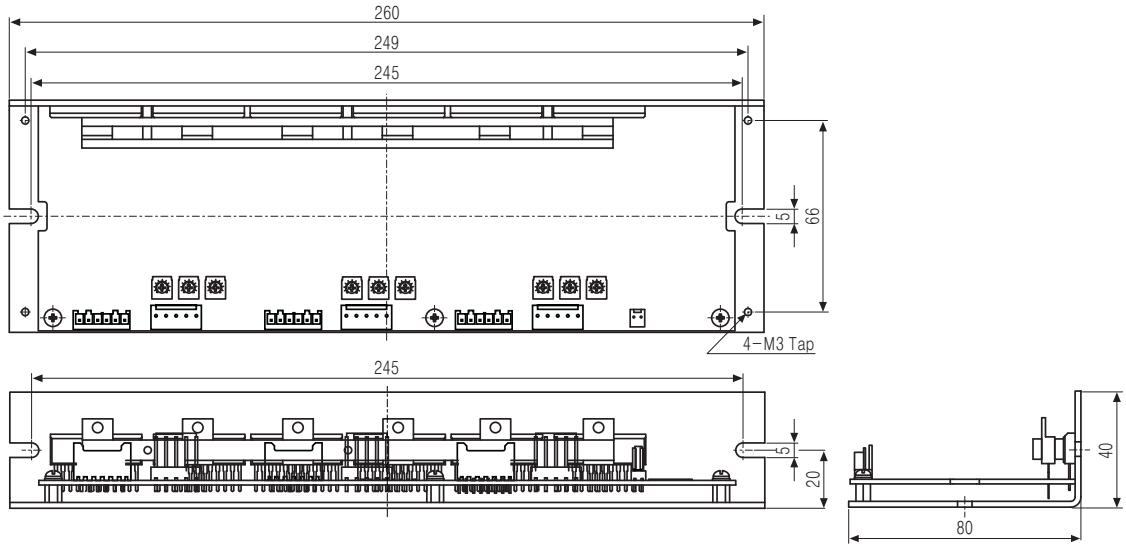

※Accessory connector specification

	Connector		Qty
	Manufacturer	Model No.	
Power 2P Housing	Yeonho electronics	YH396-02V	1
Motor 5P Housing	Yeonho electronics	YH396-05V	3
Signal 6P Housing	JST	XAP-06V-1	3
Power/Motor Terminal Pin	Yeonho electronics	YT396	17
Signal Terminal Pin	JST	SXA-001T-P0.6	18

Unit:mm

2-phase stepping motor driver(MD2U Series)

▣Ordering information

MD 2 U – M D 20

Run current	20	2A/Phase
Power supply	D	24-35VDC
Operation type	M	Microstep
	I	Intelligent type
Run method	U	Unipolar drive
Motor phase	2	2-Phase
Item	MD	Motor driver

▣Specifications

Model	MD2U-MD20	MD2U-ID20
Appearances & Dimensions	CE [W105×H76.5×L39.5mm]	CE [W105×H76.5×L39.5mm]
Power supply	(※1) 24-35VDC 3A	
RUN current	0.5 to 2.0A / Phase	
RUN method	Unipolar constant current drive	
Resolution	1, 2, 4, 5, 8, 10, 16, 20 division	———
Input pulse width	Min. 10㎲	———
Input pulse interval	Max. 50%	———
Rising/falling time	Max. 0.5㎲	———
Max. input pulse frequency	(※2) 50kHz	———
Input voltage	High : 4-8VDC, Low : 0-0.5VDC	———
Input resistance	300Ω (CW, CCW), 390Ω (HOLD OFF)	3.3kΩ (CW/CCW, RUN/STOP, HOLD OFF)
Insulation resistance	Min. 200MΩ (at 500VDC megger)	
Dielectric strength	1000VDC 60Hz for 1 minute	
Vibration	1.5mm amplitude at frequency of 10 to 55Hz (for 1 min.) in each of X, Y, Z directions for 2 hours	
Shock	300m/s² (30G) in X, Y, Z directions for 3 times	
Ambient temperature	0 to 50℃ (at non-freezing status)	

(※1) When using over 30VDC, it should be mounted at ventilative place due to increasing heat.
(※2) Max. input pulse frequency is changed depending on resolution.

▣Connections

◎MD2U-MD20

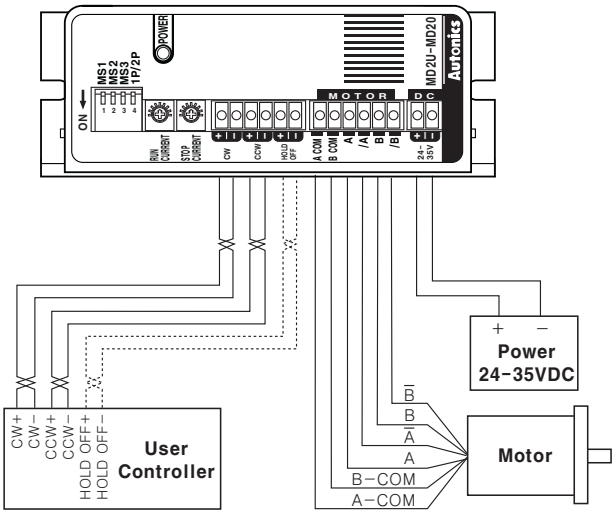

◎MD2U-ID20

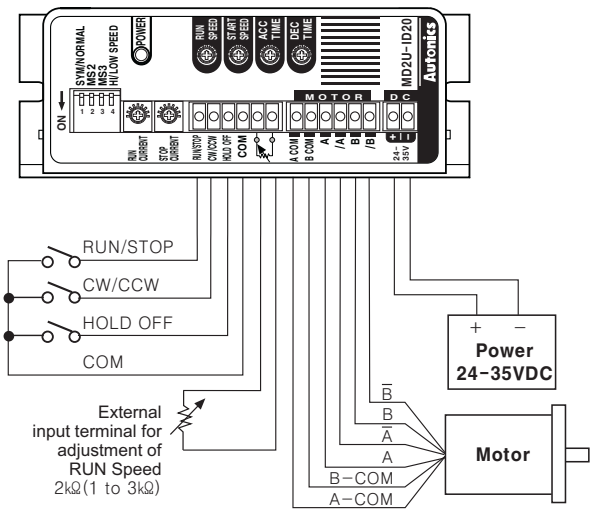

1 · 2-Axis high speed programmable motion controller(PMC-HS Series)

▣Ordering information

PMC – 2HS – USB

Communication type	232	RS232C
	USB	USB / RS232C
Axis/Type	1HS	1-Axis high speed stand-alone
	2HS	2-Axis high speed stand-alone
Item	PMC	Programmable motion controller

▣Specifications

Model	PMC-1HS-232	PMC-1HS-USB	PMC-2HS-232	PMC-2HS-USB
Appearances & Dimensions	CE 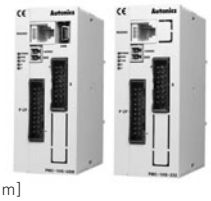 [W35.5×H90×L64mm]		CE [W35.5×H90×L64mm]	
Control axis	1-Axis		2-Axis(Each axis can be independently programmed)	
Motor of control	Pulse string input stepping motor or servo motor			
Index step numbers	64 indexes per each axis			
Inposition range	-8,388,608 to +8,388,607(Available pulse scaling function)			
Drive speed numbers	4EA			
Range for the drive speed configuration	1 pps to 4 Mpps(1 to 8,000 × Magnification 1 to 500)			
Operation mode	• Scan • Continuous • Index • Program			
Reference point return	High speed near home search(Step1) → Low speed home search(Step2) → Low speed Z-phase search(Step3) → High speed offset movement(Step4) Configuring the detection method and Enable/Disable in each step.			
Program function	• Memory : EEPROM • Steps : 64 Steps • Start : Power ON program auto start function • Home search : Power ON home search function • Control : ABS, INC, HOM, IJP, OUT, OTP, JMP, REP, RPE, END, TIM, NOP(12 EA)			
Control interface	Parallel I/F			
Ccommon output	1 point		2 points	
Power supply	24VDC±10%			
Teaching unit (Sold separately)	• Exclusive PMC-1HS/2HS (Sold separately.) • It enables to control the operation mode, parameter and program record of PMC-1HS/PMC-2HS without PC.		**PMC-2TU-232(Sold separately)** [W150×H61.7×L23mm]	

▣Dimensions

●PMC-2HS(USB/232)

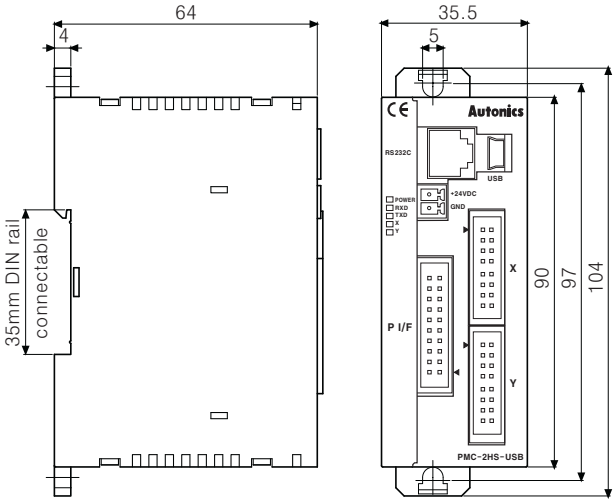

●PMC-2TU-232(Sold separately)

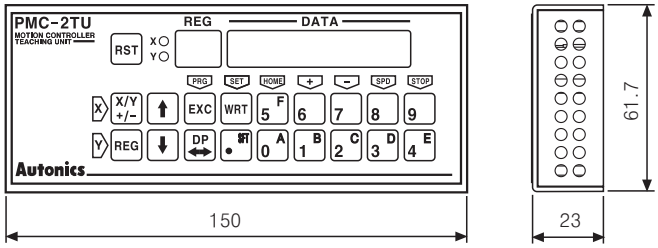

Unit:mm

2-Axis high speed interpolation motion controller(PMC-2HSP Series)

▣Ordering information

PMC – **2HSP** – **USB**

Communication type	485	RS485 / RS232C
	USB	USB / RS232C
Axis/Type	2HSP	2-Axis high speed interpolation
	2HSN	2-Axis high speed normal
Item	PMC	Programmable motion controller

▣Specifications

Model	PMC-2HSP-USB	PMC-2HSP-485	PMC-2HSN-USB	PMC-2HSN-485
Appearances & Dimensions	[W35.5×H90×L64mm]	[W35.5×H90×L64mm]	Line-up [W35.5×H90×L64mm]	Line-up [W35.5×H90×L64mm]
Control axis	2-Axis			
Motor for control	Pulse string input of stepping motor or servo motor			
Index numbers	64 steps for each axis			
Range for the index pulse configuration	-8,388,608 to +8,388,607(Absolute / Relative value selectable, Pulse scaling function is available)			
Drive speed numbers	4EA			
Range for the drive speed configuration	1pps to 4Mpps(1 to 8,000 × Magnification 1 to 500)			
Operation modes	• Jog • Continuous • Index • Program drive			
Home Search operation mode	• 4 Step : High speed near home search(Step1) → Low speed home search(Step2) → Low speed Z-phase search(Step3)→ High speed offset movement(Step4) • Power ON home search function selectable			
RUN mode	Scan / Continuous / Index(Number of index : 64EA)			
	Program mode: Power on program start function / Program step : 200 step			
	ABS: Move absolute position	RID: 2-axis CCW arc interpolation(※1)	IRD: Stand-by external input	
	INC: Move relative positon	TIM: Timer	OPC: ON/OFF output port	
	HOM: Home search	JMP: Jump	OPT: ON pulse from output port	
	LID: 2-axis CCW linear interpolation (※1)	REP: Start repetition	NOP: No Operation	
	CID: 2-axis CW circular interpolation(※1)	RPE: End repetition	END: End program	
	FID: 2-axis CW arc interpolation (※1)	ICJ: Jump input condition		
I/O	• Parallel I/F(CN3) : Input 13EA, Output 4EA • X-axis(CN4) / Y-axis(CN5) : Input 8EA, Output 6EA(General-purpose I/O, 2EA each)			
Power supply	24VDC ±10%			

(※1)These commands are only for PMC-2HSP series.

▣Connections

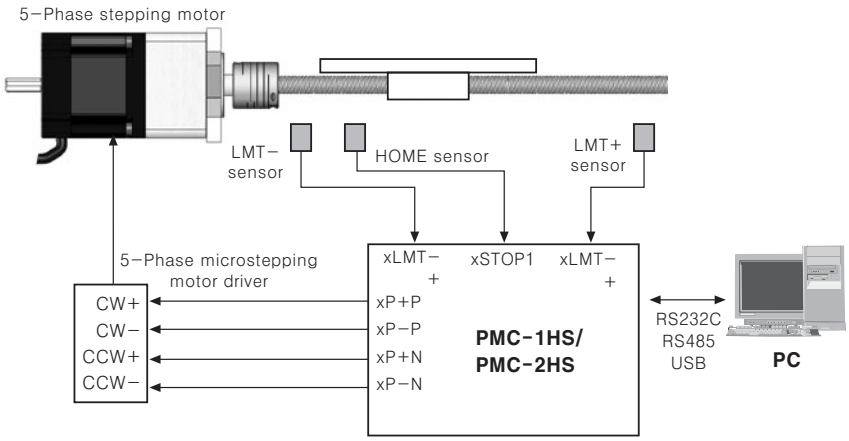

< Basic configuration of the motion controller(Configuration only for X-axis) >

▣Dimensions

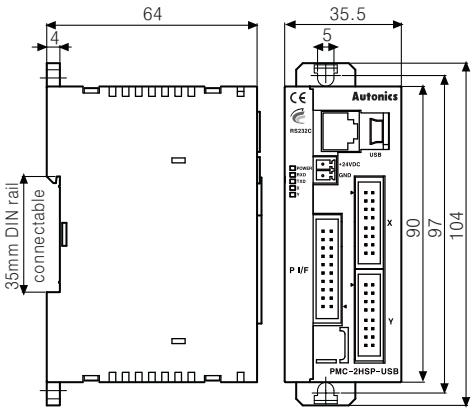

Unit:mm

Graphic panel(GP-S044 Series)

▣Ordering information

GP – S 044 – S 1 D 0

Interface	0	RS232C, RS422 (1each)
	1	RS232C (2)
Power supply	D	24VDC
Color	1	MONO (Blue, White)
Display unit	S	STN LCD
Monitor size	044	4.4inch
Series	S	S series
Item	GP	Graphic panel

▣Specifications

Model	GP-S044-S1D0	GP-S044-S1D1
Appearances & Dimensions	CE K [W145×H75×L34mm]	
Power supply	24VDC ±10%	
Power consumption	Max. 3.6W	
LCD color	4.4inch STN Blue Negative	
Resolution	240×80 dots	
Display size	112.8mm×37.6mm	
Backlight	White LED	
Brightness	Adjustable by software	
Language	English, Korean, Japanese, Chinese, Russian(Language can be customized.)	
Text	• High resolution display up to 400 letters • 6×8, 8×8 ASCII character, High quality view of numbers • 8×16 ASCII characters, 16×16 regional characters(1–8 times bigger for width, 0.5–5 times bigger for height)	
Memory screen	500page(Memory 512kB)	
Serial interface	RS232C, RS422 (1each)	RS232C (2)
Touch switch	Width 15×Height 4 = 60	
Protection	IP65F for front panel	
Accessory	Fixing braket : 4, Rubber waterproof ring, Battery included	

▣Dimensions

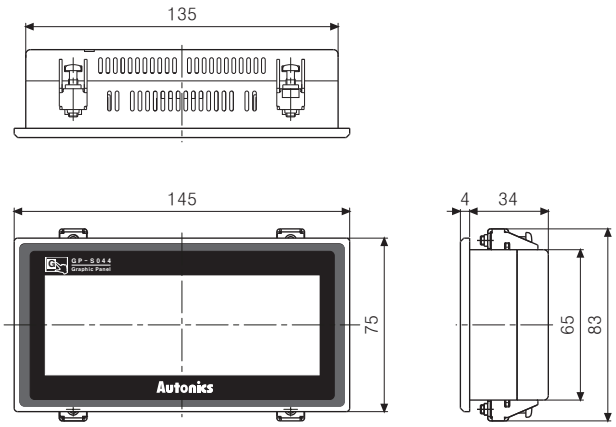

●Panel cut–out

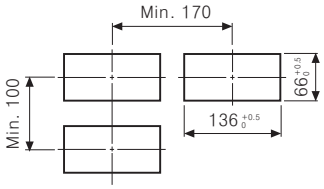

●The fixing bracket

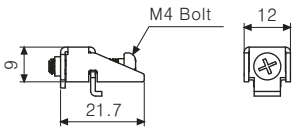

Unit:mm

Graphic panel(GP-S057 Series)

▣Ordering information

GP – S 057 – S 1 D 0

Interface	0	RS232C, RS422 (1each)
	1	RS232C (2)
Power supply	D	24VDC
Color	1	MONO (Blue, White)
Display unit	S	STN LCD
Monitor size	057	5.7inch
Series	S	S series
Item	GP	Graphic panel

▣Specifications

Model	GP-S057-S1D0	GP-S057-S1D1
Appearances & Dimensions	CE KC [W156×H132×L35.5mm]	
Power supply	24VDC ±10%	
Power consumption	Max. 3.6W	
LCD color	5.7inch STN Blue Negative	
Resolution	320×240 dots	
Display size	119mm×91mm	
Backlight	White LED	
Brightness	Adjustable by software	
Language	English, Korean, Japanese, Chinese, Russian(Language can be customized.)	
Text	• Up to 1590 characters(6×8font) displayable • 6×8, 8×8 ASCII character, High quality view of numbers • 8×16 ASCII characters, 16×16 regional characters(1–8 times bigger for width, 0.5–5 times bigger for height)	
Memory screen	500page(Memory 512kB)	
Serial interface	RS232C, RS422 (1each)	RS232C (2)
Touch switch	Width 16×Height 12 = 192	
Protection	IP65F for front panel	
Accessory	Fixing braket : 4, Rubber waterproof ring, Battery included	

▣Dimensions

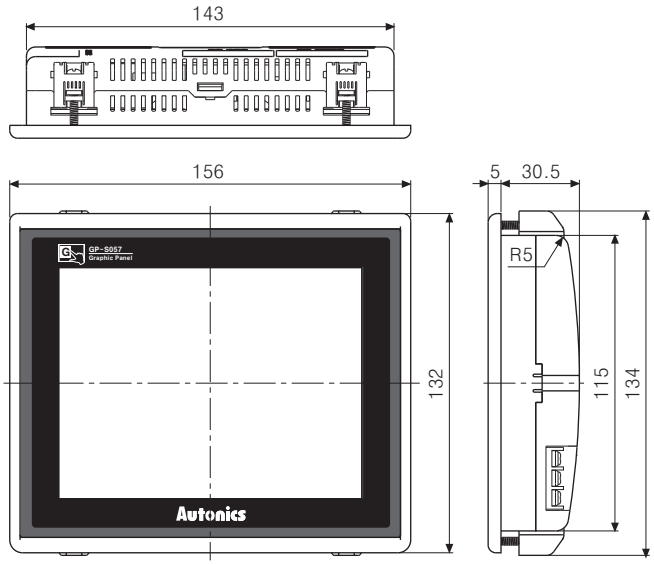

●Panel cut–out

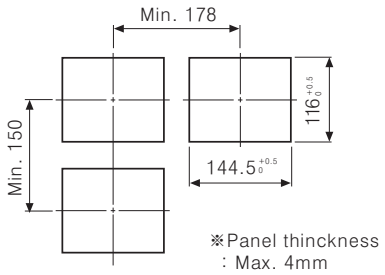

※Panel thinckness : Max. 4mm

●The fixing bracket

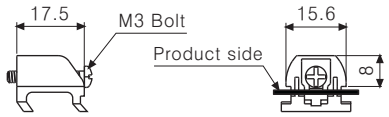

Unit:mm

Graphic panel(GP-S070 Series)

▣Ordering information

GP – S 070 – T 9 D 6

Interface	6	RS232C, RS422, USB HOST USB DEVICE, Ethernet
	7	RS232C (2), USB HOST USB DEVICE, Ethernet
Power supply	D	24VDC
Color	9	16,777,216 color
Display unit	T	TFT color LCD
Monitor size	070	7inch
Series	S	S series
Itme	GP	Graphic panel

▣Specifications

Model		GP-S070-T9D6	GP-S070-T9D7
Appearances & Dimensions		CE KC [W194×H134×L35mm]	NEW
Power supply		24VDC	
Allowable voltage range		90 to 110% of power supply	
Power consumption		Max. 7.2W	
Display performance	LCD type	7inch TFT color LCD	
	Resolution	800×480 dots	
	Display area	152.4mm×94.44mm	
	Color	16,777,216 color	
	LCD view angle	Within each 50˚/ 60˚/ 65˚/ 65˚of top/bottom/left/right	
	Backlight	White LED	
	Brightness	Adjustable by software	
Graphic drawing performance	Language	English, Korean(Language can be customized.)	
	Text	• Vector font • 6×8, 8×8 ASCII character, High quality view of numbers • 8×16 ASCII characters, 16×16 regional characters(1 to 8 times bigger for width, 0.5 to 5 times bigger for height)	
	Graphic drawing memory	512 KB	
	Number of user screen	500 pages	
	Touch switch	Width 16×Height 12 = 192	
Serial interface		Each port of RS232C, RS422(asynchronous method)	Two ports of RS232C
USB interface		Each of USB HOST, USB Device(Version 1.1)	
Ethernet interface		IEEE802.3(U), 10/100Base-T	
Real-time controller		RTC embedded	
Protection		IP65F for front panel	
Accessory		Fixing bracket: 4pcs, Battery(included)	

▣Dimensions

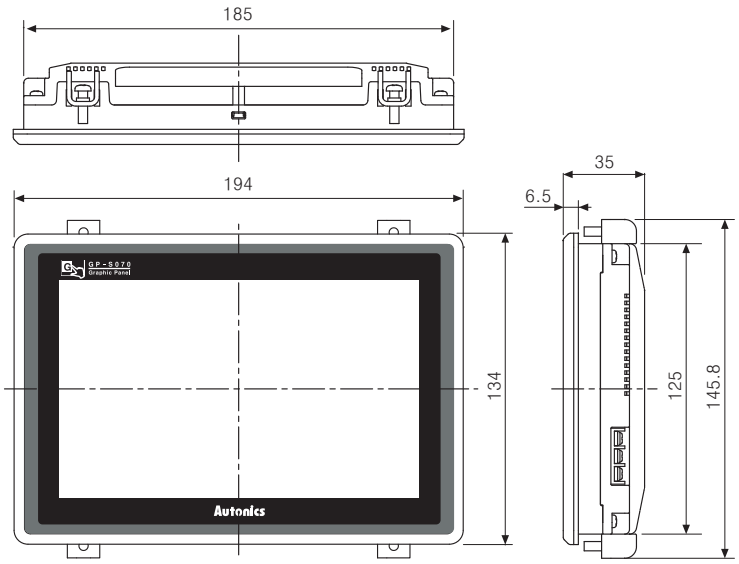

●Panel cut-out

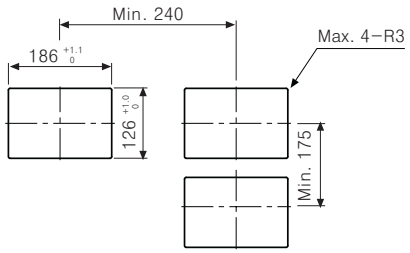

※Panel thinckness
: Max. 4mm

●The fixing bracket

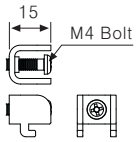

Unit:mm

Logic panel(LP-S044 Series)

▣Ordering information

LP – S 044 – S 1 D 0 – C 5 T – A

Expansion function type	A	Supports Type A
I/O connector	T	Terminal block connector
	R	Ribbon cable connector
I/O composition	5	IN:16points, OUT:16points
Module	C	All-in one type
Interface	0	RS232C, RS422 (1each)
	1	RS232C (2)
Power supply	D	24VDC
Color	1	MONO (Blue, White)
Display unit	S	STN LCD
Monitor size	044	4.4inch
Series	S	S series
Item	LP	Logic panel

▣Specifications

Model		LP-S044-S1D0-C5T-A	LP-S044-S1D0-C5R-A	LP-S044-S1D1-C5T-A	LP-S044-S1D1-C5R-A
Appearances & Dimensions		CE K 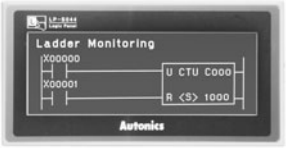 [W145×H75×L34mm]			
Power supply		24VDC ±10%			
Power consumption		Max. 3.6W			
Display performance	LCD type	4.4inch STN Blue Negative			
	Resolution	240×80 dots			
	Display area	112.8mm×37.6mm			
	Color	MONO(Blue, White)			
	LCD view angle	Top/bottom/left/right 30° in each direction			
	Backlight	White LED			
	Brightness	Adjustable by software			
Graphic drawing performance	Language	English, Korean, Japanese, Chinese, Russian(Language can be customized.)			
	Text	• High resolution display up to 400 letters • 6×8, 8×8 ASCII character, High quality view of numbers • 8×16 ASCII characters, 16×16 regional characters(1-8 times bigger for width, 0.5-5 times bigger for height)			
	Graphic drawing memory	384 KB			
	Number of user screen	500 pages			
	Touch switch	Width 15×Height 4 = 60			
Control performance	Command	Basic command : 28, application command : 220			
	Program capacity	8K step			
	Processing time	Average : 6 to 7μs/step			
	I/O control type	Batch processing			
	Computer control mode	Repeated-doubling method, interrupt processing			
	Device range	*See manual			
Serial interface		RS232C, RS422 (1each) : Asynchronous type		RS232C (2)	
Real-time controller		RTC embedded			
Protection ratings		IP65F for front panel			
I/O connector type		Terminal block connector	Ribbon cable connector	Terminal block connector	Ribbon cable connector
Accessory		Fixing bracket : 4pcs, Rubber waterproof ring, Battery included			

▣Dimensions

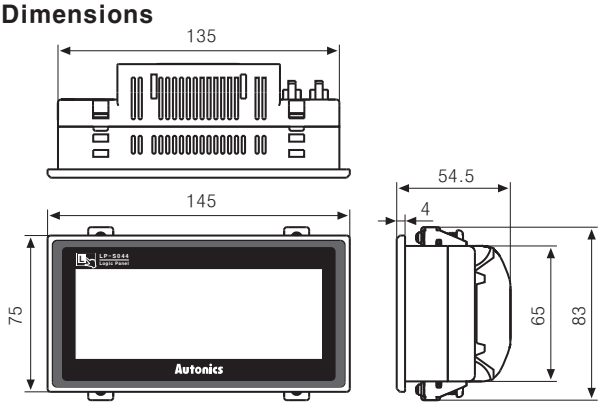

●Panel cut-out

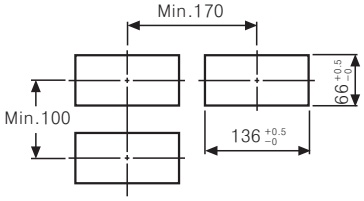

●The fixing bracket

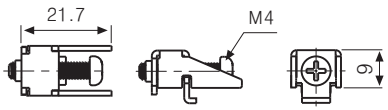

Unit:mm

Logic panel(LP-S070 Series)

▣Ordering information

LP – S 070 – T 9 D 6 – C 5 R

I/O connector	T	Terminal block connector
	R	Ribbon cable connector
I/O composition	5	IN:16points, OUT:16points
Module	C	All-in one type
Interface	6	RS232C, RS422,USB HOST, USB DEVICE, Ethernet
	7	RS232C(2),USB HOST, USB DEVICE, Ethernet
Power supply	D	24VDC
Color	9	16,777,216 color
Display unit	T	TFT color LCD
Monitor size	070	7inch
Series	S	S series
Item	LP	Logic panel

▣Specifications

Model		LP-S070-T9D6-C5R(T)	LP-S070-T9D7-C5R(T)
Appearances & Dimensions		CE KC NEW [W194×H134×L35mm]	
Power supply		24VDC	
Allowable voltage range		90 to 110% of power supply	
Power consumption		Max. 7.2W	
Display performance	LCD type	7inch TFT color LCD	
	Resolution	800×480 dots	
	Display area	152.4mm×94.44mm	
	Color	16,777,216 color	
	LCD view angle	Within each 50˚/ 60˚/ 65˚/ 65˚ of top/bottom/left/right	
	Backlight	White LED	
	Brightness	Adjustable by software	
Graphic drawing performance	Language	English, Korean(Language can be customized.)	
	Text	• Vector font • 6×8, 8×8 ASCII character, High quality view of numbers • 8×16 ASCII characters, 16×16 regional characters(1 to 8 times bigger for width, 0.5 to 5 times bigger for height)	
	Graphic drawing memory	16MB	
	Number of user screen	500 pages	
	Touch switch	Analog touch	
Control performance	Command	Basic command : 28, application command : 233	
	Program capacity	8K step	
	Processing time	Average : Approx. 2us/basic command, application command	
	I/O control type	Batch processing	
	Computer control mode	Repeated-doubling method, interrupt processing	
	Device range	*See manual	
	Special function	Positioning function *See manual	
Serial interface		Each port of RS232C, RS422(asynchronous method)	Two ports of RS232C
USB interface		Each of USB Host, USB Device(Version 1.1)	
Ethernet interface		IEEE802.3(U), 10/100Base-T	
Real-time controller		RTC embedded	
Protection		IP65F for front panel	
Accessory		Fixing bracket: 4pcs, Battery(included)	

Logic panel(LP-S070 Series)

▣Dimensions

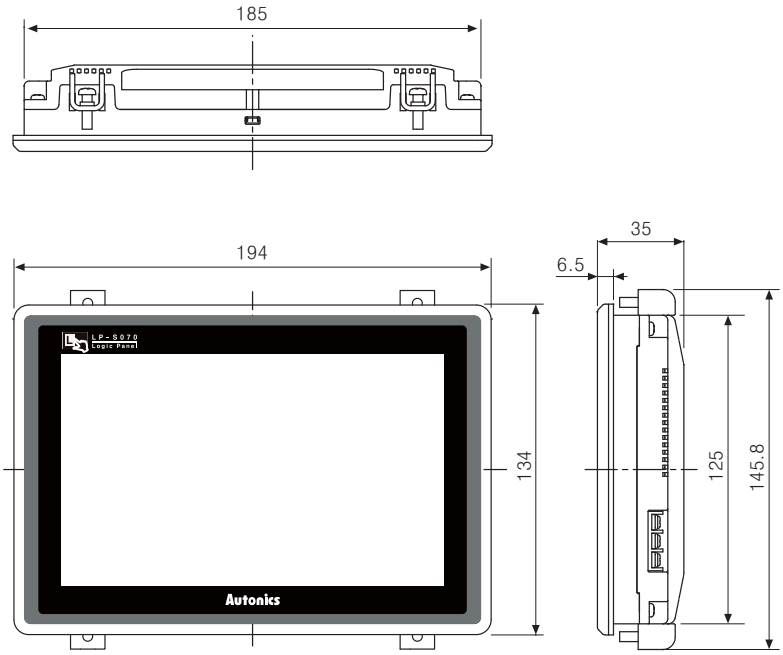

●Panel cut-out

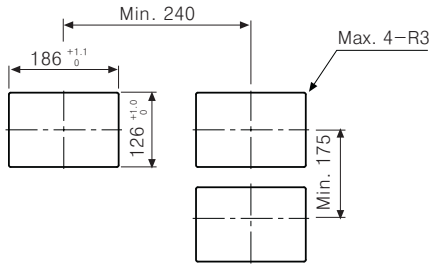

※Panel thinckness
: Max. 4mm

●The fixing bracket

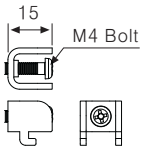

Unit:mm

DeviceNet digital remote I/O(ARD Series)

▣Ordering information

AR D – D I 08 A E

Structure	No mark	Basic unit
	E	Expansion unit
I/O specification	A	AC voltage
	N	NPN open collector
	P	PNP open collector
	R	Relay
	S	SSR
I/O point	08	8 points type
	16	16 points type
I/O type	I	Input type
	O	Output type
	X	I/O integrated type
Digital/Analog	D	Digital type
Network	D	DeviceNet type
Item	AR	Autonics remote I/O unit

▣Specifications

Model	ARD-DI08A / ARD-DI08AE	ARD-DI16N / ARD-DI16NE	ARD-DI16P / ARD-DI16PE	ARD-DO08R / ARD-DO08RE	ARD-DO08S / ARD-DO08SE	ARD-DO16N / ARD-DO16NE	ARD-DO16P / ARD-DO16PE	ARD-DX16N / ARD-DX16NE	ARD-DX16P / ARD-DX16PE
Appearances & Dimensions	CE [W105×H52×L38.5mm]								
Power supply	Rated voltage : 24VDC, Voltage range : 12–28VDC								
Power consumption	3W(MAX.)								
Isolation type	Photocoupler isolated								
I/O points	8 points of AC input	16 points of NPN input	16 points of PNP input	8 points of Relay output	8 points of SSR output	16 points of NPN output	16 points of PNP output	Each 8 points of NPN input + output	Each 8 points of PNP input + output
Control I/O – Voltage	75–250 VAC	10–28VDC		Normal open(NO) 250VAC 2A 1a	30–250 VAC	10–28VDC (Voltage drop : Max. 0.5V)			
Control I/O – Current	13mA/ Point	10mA/Point			1A/ Point	Output : 0.5A/Point (Leakage current: Max. 0.5mA)		Input : 10mA, Output : 0.5A/Point (Leakage current: Max. 0.5mA)	
Common	8 points, Common			1 point, 1 COM	8 points, Common				
Protection	IP20(IEC standard)								
Protection circuit	Surge, Reverse polarity protection circuit (Common) • TR output type ☞ Overcurrent protection circuit(NPN type : Operated from 1.9A→ Power is reapplied in overcurrent status, PNP type : Operated at min. 0.7A), Overheating protection (165℃ Typical), Short-circuit protection								
Indicator	Network status(NS) LED(Green, Red), Unit status(MS) LED(Green, Red), I/O status LED(Input : Green, Output : Red)								
Material	Front case : PC, Body case : PC, Rubber cap : NBR								
Mounting	DIN rail or screw lock type								
Approval	DeviceNet	CE DeviceNet		DeviceNet		CE DeviceNet			

DeviceNet digital remote I/O(ARD Series)

▣DeviceNet communication

Item	Specification
Communication	I/O Slave messaging(Group 2 Only slave) • Poll command : Y • Bit_strobe command : Y • Cyclic command : Y • COS command : Y
Communication distance	Max. 500m(125kbps), Max. 250m(250kbps), Max. 100m(500kbps)
Node	Max. 64node(Set by front panel rotary switch)
Communication speed	It is set automatically when connecting with master • 125kbps • 250kbps • 500kbps
Insulation	I/O and inner circuit : Photocoupler is insulated, DeviceNet and inner circuit : Non-insulated, Power of DeviceNet : Non-insulated
Power supply	• Power supply:24VDC • Power range : 12-28VDC • Power consumption:Max. 3W
Approval	ODVA Conformance test

▣Connections

◎**ARD-DI08A(E)** [AC input]

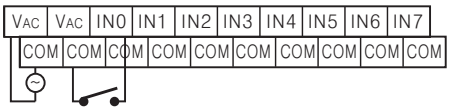

◎**ARD-DI16N(E)** [DC NPN input]

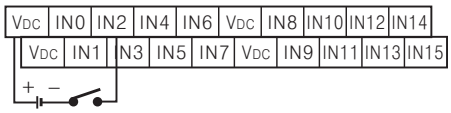

◎**ARD-DI16P(E)** [DC PNP input]

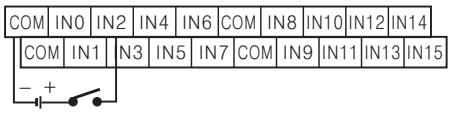

◎**ARD-DO08R(E)** [Relay output]

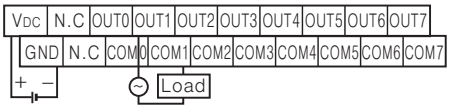

◎**ARD-DO08S(E)** [SSR output]

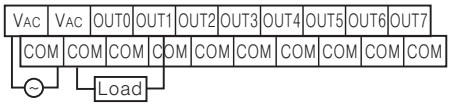

◎**ARD-DO16N(E)** [NPN output]

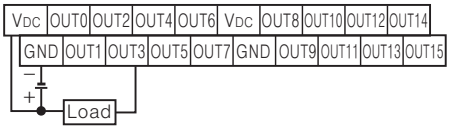

◎**ARD-DO16P(E)** [PNP output]

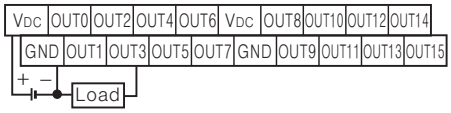

◎**ARD-DX16N(E)** [DC NPN input/DC NPN output]

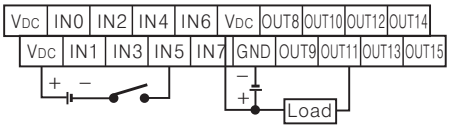

◎**ARD-DX16P(E)** [DC PNP input/DC PNP output]

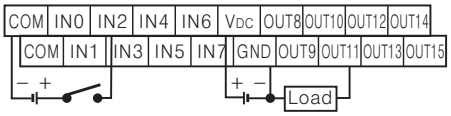

▣Dimensions

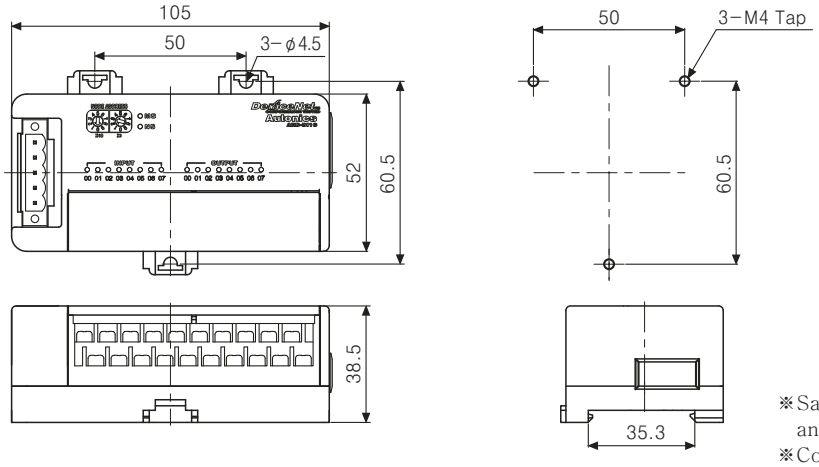

※Same dimensions are applied to both basic and expansion unit.
※Connecting connectors are included for expansion modules.

Unit:mm

DeviceNet sensor connector type digital remote I/O(ARD Series)

▣Ordering information

AR D – D I 08 N ___ – 4S

Termina type	4S	Sensor connector(4pin type)
I/O specification	N	NPN open collector
	P	PNP open collector
I/O points	08	8 points type
I/O type	I	Input type
	O	Output type
Digital/Analog	D	Digital type
Network	D	Basic unit(DeviceNet type)
	X	Expansion unit(Use in DeviceNet/Modbus)
Item	AR	Autonics remote I/O unit

▣Specifications

Model					
Basic unit		ARD-DI08N-4S	ARD-DI08P-4S	ARD-DO08N-4S	ARD-DO08P-4S
Expansion unit		ARX-DI08N-4S	ARX-DI08P-4S	ARX-DO08N-4S	ARX-DO08P-4S
Appearances & Dimensions		CE [W31×H81.8×L58.9mm]			
Power supply		Rated voltage : 24VDC, Voltage range : 12–28VDC			
Power consumption		Max. 3W			
Isolation type		Photocoupler isolated			
I/O points		8 points of NPN input	8 points of PNP input	8 points of NPN output	8 points of PNP output
Control I/O	Voltage	10–28VDC Input		10–28VDC Output(Voltage drop: Max. 0.5VDC)	
	Current	10mA/point(Sensor current: 150mA/points)		0.3A/point(Leakage current: Max. 0.5mA)	
Common		8 points, Common			
Protection		IP20(IEC standard)			
Protection circuit		Surge, Reverse polarity protection circuit (Common) • TR output type ☞ Overcurrent protection circuit(NPN type : Operated from 1.9A* Power is reapplied in overcurrent status, PNP type : Operated at min. 0.7A), Overheating protection (165℃ Typical), Short-circuit protection			
Indicator		etwork status(NS) LED(Green, Red), Unit status(MS) LED(Green, Red) I/O status LED(Input: Green, Output: Red)			
Material		Front case : PC, Body case : PC			
Mounting		DIN rail or screw lock type			
Approval		CE DeviceNet			

▣DeviceNet communication

Item	Specification
Communication	I/O Slave messaging(Group 2 Only slave) • Poll command : Y • Bit_strobe command : Y • Cyclic command : Y • COS command : Y
Communication distance	Max. 500m(125kbps), Max. 250m(250kbps), Max. 100m(500kbps)
Node	Max. 64node(Set by front panel rotary switch)
Communication speed	It is set automatically when connecting with master • 125kbps • 250kbps • 500kbps
Insulation	I/O and inner circuit : Photocoupler is insulated, DeviceNet and inner circuit : Non-insulated, Power of DeviceNet : Non-insulated
Power supply	• Power supply:24VDC • Power range : 12–28VDC • Power consumption:Max. 3W
Approval	ODVA Conformance test

DeviceNet sensor connector type digital remote I/O(ARD Series)

▣Connections

◎AR□-DI08N-4S

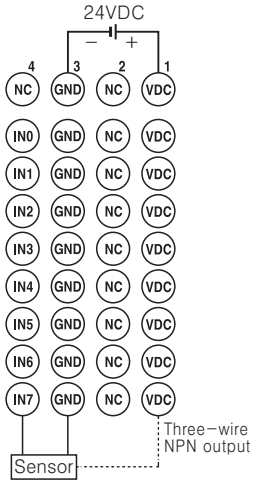

IN : 8P, 24VDC 10mA

◎AR□-DI08P-4S

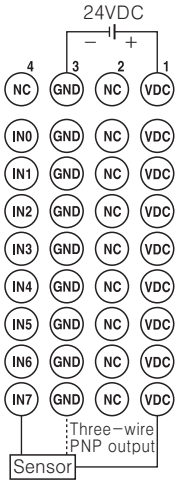

IN : 8P, 24VDC 10mA

◎AR□-DO08N-4S

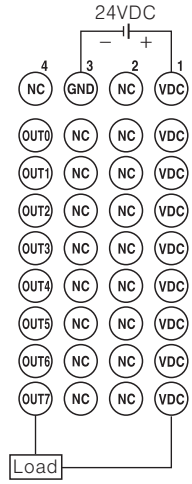

IN : 8P, 24VDC 0.3A/Point

◎AR□-DO08P-4S

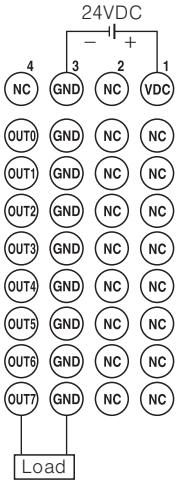

IN : 8P, 24VDC 0.3A/Point

▣Dimensions

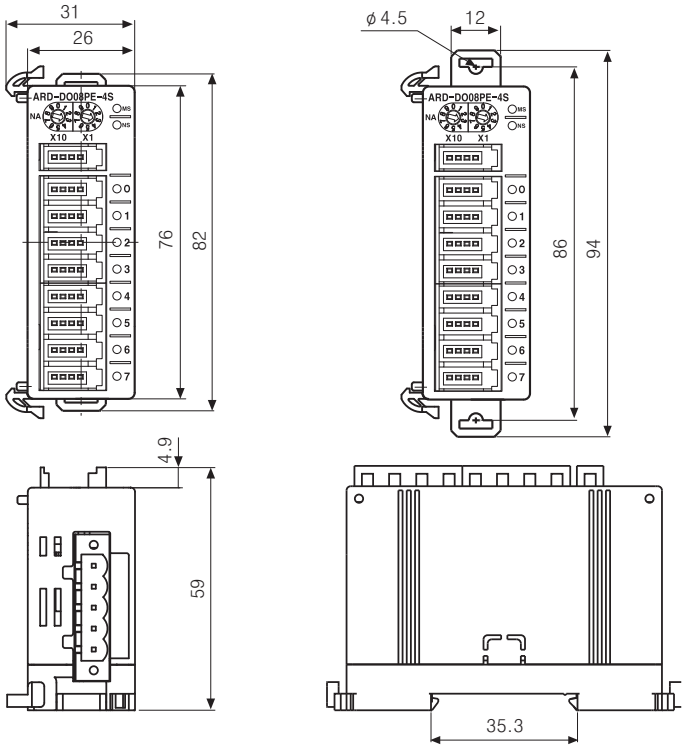

※Same dimensions are applied to both basic and expansion unit.

Unit:mm

Communication converter(RS232C to RS485 converter)

■Ordering information

SCM − 3 8 I

I (Isolation type)	Insulation
8	RS485
3	RS232C
SCM (Item)	Serial converter module

■Specifications

Model		SCM-38I
Appearances & Dimensions		CE [W39×H23×L75.5mm]
Power supply		12−24VDC
Allowable voltage range		90 to 110% of rated voltage
Power consumption		Max. 1.7W
Maximum communication speed		(※1) 1,200 to 115,200bps(Recommended : 9,600bps)
Communication type		Half duplex type
Available communication distance		Max. 1.2km
Multi−Drop		Max. 31 multi−drop
Protocol (※1)	Data Bit	5 to 8 data bits
	Stop Bit	1 or 2 stop bits
	Parity Bit	No/Odd/Even parity bit
Connection type	RS232C	D−sub 9pin
	RS485	4−wire screw terminal(2wire communication type)

(※1) Protocol and communication speed are set by Hyper terminal. DAQMaster, ParaSet, Modbus Poll.
When communicating with Autonics products, set communication speed to 9,600bps.

■Connections

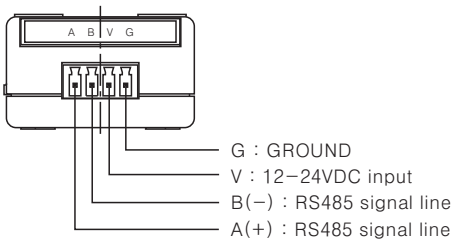

●Terminal resistance selection

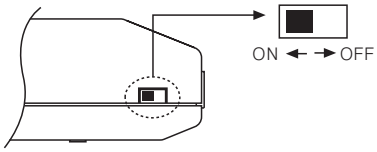

ON Using terminal resistance
OFF Not using terminal resistance

■Dimensions

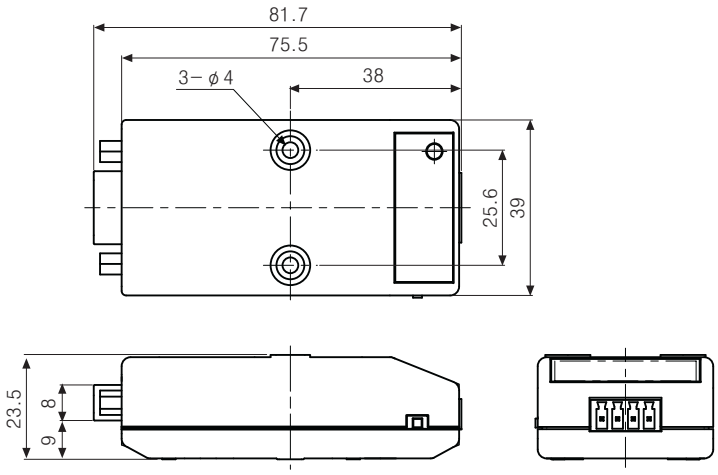

※Side view of the multilayer

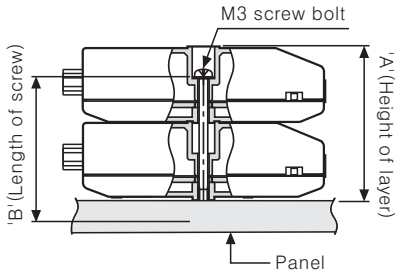

Number of layers(N)	'A' size (23N+0.5)	'B' size (23N−3)
1	23.5	20
2	46.5	43
3	69.5	66
4	92.5	89

Unit:mm

Communication converter(USB to Serial converter, USB to RS485 converter)

■Ordering information(SCM-US)

SCM − U S

Isolation type: No mark	Non−isolation
S	Serial(TTL level)
U	USB
Item: SCM	Serial converter module

■Ordering information(SCM-US48I)

SCM − U S 48 I

Isolation type: I	Insulation
48	RS485
S	Serial(TTL level)
U	USB
Item: SCM	Serial converter module

■Specifications

Model		SCM-US	SCM-US48I
Appearances & Dimensions		[W52×H18×L8mm]	[W39×H23×L75.5mm]
Power supply		(※1) 5VDC USB bus power	
Power consumption		Max. 1W	
Communication speed		(※2) 1,200 to 115,200bps(Recommended : 9,600bps)	
Communication type		Half duplex type	
Communication distance		1.5m(No extension allowed)	USB: Max. 1m±30%, RS485: Max. 1.2km
Isolation type		Non−isolated	————
Multi−drop		————	Max. 31 multi−drop
Protocol (※2)	Data bit	————	5 to 8 data bits
	Stop bit	————	1 or 2 stop bits
	Parity bit	————	No/Odd/Even parity bit
Connection type	USB	————	B type connector
	RS485	————	4 wire screw terminal(2 wire communication type)
Connector type		• Computer ☞ USB(Type A) • Autonics Products ☞ Earphone Jack (4 pole stereo phone plug)	• Computer ☞ USB(Type B) • RS485: 4−wire Screw terminal(2 wire communication type)

(※1) USB bus power is supplied from PC or USB host controller.
(※2) Protocol and communication speed are set by Hyper terminal. DAQMaster, ParaSet, Modbus Poll.
When communicating with Autonics products, set communication speed to 9,600bps.

■Connections

●SCM-US

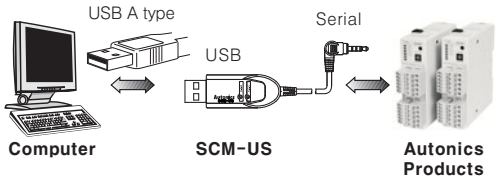

●SCM-US48I

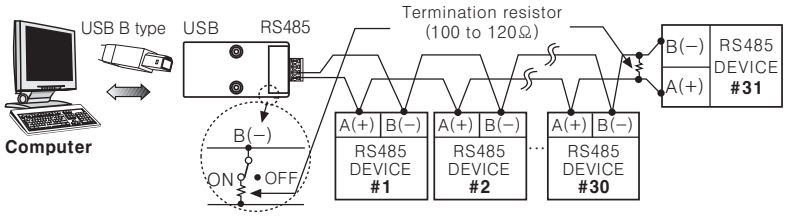

■Dimensions

●SCM-US

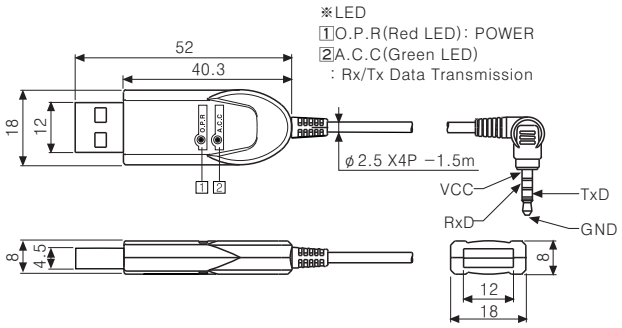

●SCM-US48I

※USB cable is enclosed and also sold separately.(Model: USB AB CBLE)

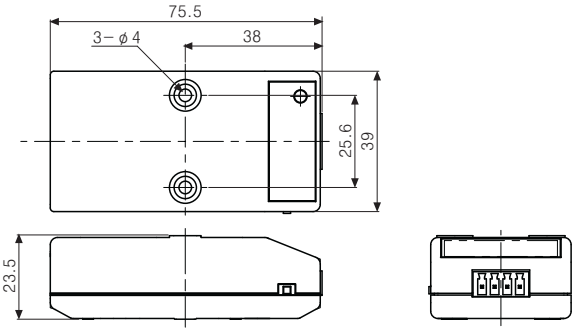

※USB 2.0 A, B type cable

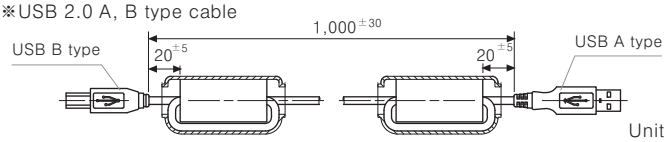

Unit:mm

Interface terminal block(AFS Series)

▣Ordering information

AF S — H 20

Number of connectors	20	20pins
	40	40pins
	50	50pins
Connector type	H	Hirose connector
Terminal type	S	Screw
Item	AF	Interface terminal block

▣Specifications

Model	AFS-H20	AFS-H40	AFS-H50
Appearances & Dimensions	CE [20pins : W80×H39.5×L32.5mm] [40pins : W150×H39.5×L32.5mm] [40pins : W184×H39.5×L32.5mm]		
Rated voltage	Max. 125VDC, 125VAC 50/60Hz		
Rated current	Max. 1A		
Number of connectors	20pins	40pins	50pins
Number of terminals	20EA	40EA	50EA
Terminal pitch	7mm		
Applicable wires	Max. 1.25mm^2		
Insulation resistance	Min. 1,000MΩ (at 500VDC megger)		
Dielectric strength	600VAC 50/60Hz for 1 minute		
Vibration resistance	0.75mm amplitude at frequency of 10 to 55Hz(for 1 min.) in each X, Y, Z direction for 2 hour		
Shock resistance	150m/s^2(Approx. 15G) in X, Y, Z directions for 3 times		
Material	Case : MPPO, Terminal pin : Brass		
Tightening torque	0.4 to 0.6 N · m		

▣Dimensions

●AFS−H20

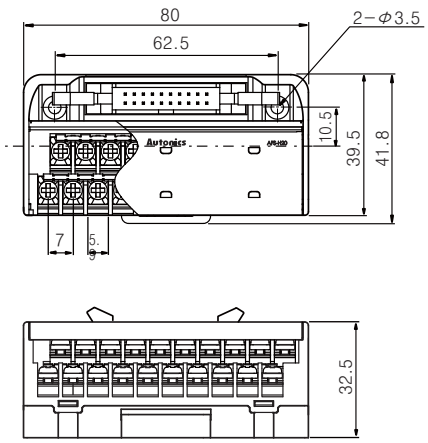

●AFS−H40 / AFS−H50

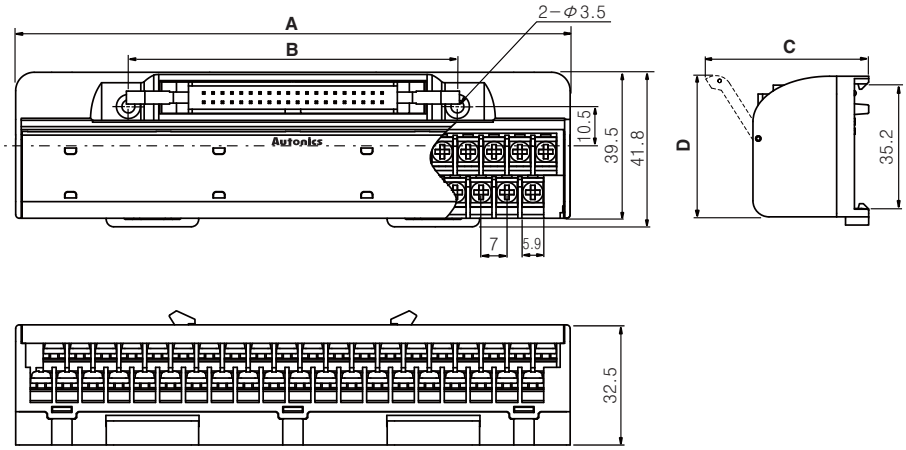

	AFS−H40	AFS−H50
A	150	184
B	89	104
C	45.8	48.9
D	39.7	34.8

Unit:mm

Common terminal block(ACS Series)

▣Ordering information

AC S – 20 L

Common type	L	Left–Right common
	T	Top–Bottom common
Number of terminals	20	20EA
	40	40EA
	50	50EA
Terminal type	S	Screw
Item	AC	Common terminal block

▣Specifications

Model	ACS-20L	ACS-20T	ACS-40L	ACS-40T	ACS-50L	ACS-50T
Appearances & Dimensions	CE [20EA : W80×H39.5×L32.5mm] [40EA : W150×H39.5×L32.5mm] [50EA : W184×H39.5×L32.5mm]					
Rated voltage	Max. 125VDC, 125VAC 50/60Hz					
Rated current	Max. 10A					
Number of terminals	20EA		40EA		50EA	
Common type	Left +COM	Top +COM	Left +COM	Top +COM	Left +COM	Top +COM
	Right –COM	Bottom –COM	Right –COM	Bottom –COM	Right –COM	Bottom –COM
Terminal pitch	7mm					
Applicable wires	Max. 1.25mm^2					
Insulation resistance	Min. 1,000MΩ (at 500VDC megger)					
Dielectric strength	600VAC 50/60Hz for 1 minute					
Vibration	0.75mm amplitude at frequency of 10 to 55Hz(for 1 min.) in each X, Y, Z direction for 2 hour					
Shock	150m/s^2(Approx. 15G) in X, Y, Z directions for 3 times					
Material	Case : MPPO, Terminal pin : Brass					
Tightening torque	0.4 to 0.6 N · m					

▣Dimensions

●ACS–20L(T)

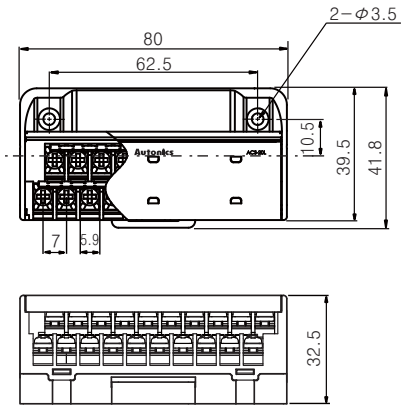

●ACS–40(T) / ACS–50(T)

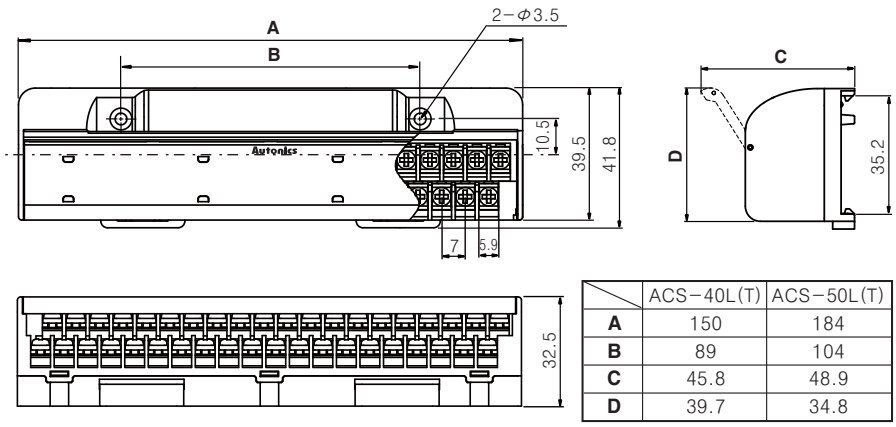

	ACS–40L(T)	ACS–50L(T)
A	150	184
B	89	104
C	45.8	48.9
D	39.7	34.8

Unit:mm

Sensor connector terminal block(AFE Series)

▣Ordering information

AF E4 – H 20 – 16 L F

Case type	F	Full case
LED	L	LED
Number of sensor connectors	16	16EA
	32	32EA
Number of pins second part	20	20pins
	40	40pins
Connector type of second part	H	Hirose connector
Connector type of first part	E4	Sensor connector 4pin socket
Item	AF	Interface terminal block

▣Specifications

Model		AFE4-H20-16LF	AFE4-H40-32LF
Appearances & Dimensions		CE [20pin : W76×H70×L38.2mm] [40pin : W128×H70×L38.2mm]	
Power supply		12-24VDC	
Allowable voltage range		90 to 110% of rated voltage	
Power consumption		(※1) Max. 1A	
Number of connectors		20pins	40pins
Number of sensor connectors		16EA	32EA
Insulation resistance		Min. 1,000MΩ (at 500VDC megger)	
Dielectric strength		600VAC 50/60Hz for 1 minute	
Vibration	Mechanical	0.75mm amplitude at frequency of 10 to 55Hz(for 1 min.) in each X, Y, Z direction for 1 hour	
	Malfunction	0.75mm amplitude at frequency of 10 to 55Hz(for 1 min.) in each X, Y, Z direction for 10 minutes	
Shock	Mechanical	150m/s²(Approx. 15G) in X, Y, Z directions for 3 times	
	Malfunction	100m/s²(Approx. 10G) in X, Y, Z directions for 3 times	
Material		Case, Base : PC	
Tightening torque		Max. 0.8 N · m	

(※1)LED current of terminal is included in Rated current.

▣Dimensions

●AFE-H20-16LF

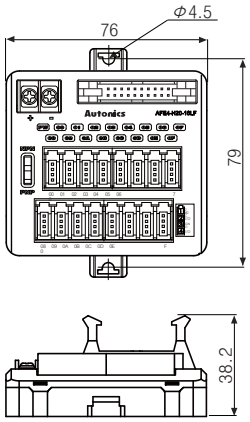

●AFE-H40-32LF

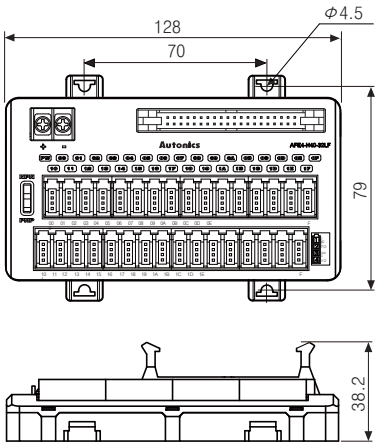

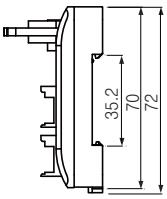

※The default setting is NPN for NPN/PNP type slide switch.

Unit:mm

Relay terminal block(ABS Series)

▣Ordering information

AB S – H 16 PA – N N

Varistor installation	N	No install
Input logic	C	Non-COM
	N	NPN (COM+)
	P	PNP (COM-)
Relay type	TN	TAKAMISAWA (Fujitsu) NYP
	PA	MATSUSHITA (Panasonic) PA
Number of relay points	01	01pcs
	04	16pcs
	16	16pcs
	32	32pcs
Connector type	S	Screw
	H	Hirose connector
Terminal type	S	Screw
Item	AB	Relay terminal block

▣Specifications

Model		ABS-S01PA-CN ABS-S01TN-CN	ABS-S04PA-CN ABS-S04TN-CN	ABS-H16PA-NN(PN) ABS-H16TN-NN(PN)	ABS-H32PA-NN(PN) ABS-H32TN-NN(PN)
Appearances & Dimensions		 [1point : W10×H75.2×L38.5mm] [4point : W32×H79×L38mm] [16point : W140×H70×L37mm] [32point : W173×H70×L37mm]			
Rated voltage		24VDC±10%			
Rated load voltage & current		250VAC 3A, 30VDC 3A(※1)			250VAC 2A, 30VDC 2A(※1) (2A/1point, 8A/1COM)
Power consumption	PA type	Max. 10.5mA(※2)		Max. 10.5mA(※2)/Max. 15.5mA(※3)	
	TN type	Max. 8.5mA(※2)		Max. 8.5mA(※2)/Max. 13.5mA(※3)	
Output type		1a contact relay output			
Number of output		1point	4point	16point	32point(8point/1COM)
Number of connectors		—		20pins	40pins
Applicable wire		Max. 1.25mm²			
Insulation resistance		Min. 1,000MΩ (at 500VDC megger)			
Dielectric strength		2,000VAC 50/60Hz for 1 minute(between coil and contacts) 1,000VAC(Fujitsu relay: 750VAC) 50/60Hz for 1 minute (between contacts of same polarity)(※4)			
Vibration	Mechanical	0.75mm amplitude at frequency of 10 to 55Hz(for 1 min.) in each X, Y, Z direction for 2 hour			
	Malfunction	0.75mm amplitude at frequency of 10 to 55Hz(for 1 min.) in each X, Y, Z direction for 10 minutes			
Shock	Mechanical	500m/s²(50G) in X, Y, Z directions for 3 times			
	Malfunction	147m/s²(15G) in X, Y, Z directions for 3 times			
Material		Case & Base: PA6, Terminal pin: Brass	Case & Base: MPPO, Terminal pin: Brass	Case: MPPO, Base: PA66(G25%), Terminal pin: Brass	
Tightening torque		0.4 to 0.6 N · m			
Accessory(※5)		—	Jumper Bar: 2EA (Model No:JB-7.62-04)	Jumper Bar: 2EA (Model No:JB-7.62-08)	—

(※1)Relay contact capacity for resistive load.
(※2)The power consumption including LED current by one relay.
(※3)The power consumption including LED current of power.
(※4)For TN type(Fujitsu relay), dielectric strength is 750VAC.
(※5)ABS-H32□□-NN(PN) does not provide Jumper Bar.

Relay terminal block(ABS Series)

▣Dimensions

●ABS-S01PA-CN / ABS-S01TN-CN

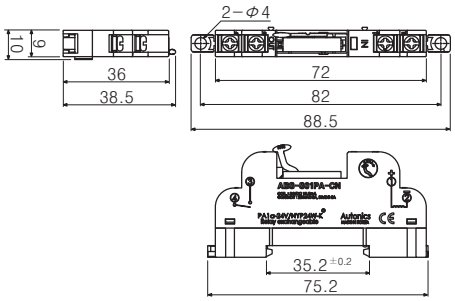

●ABS-S04PA-CN / ABS-S04TN-CN

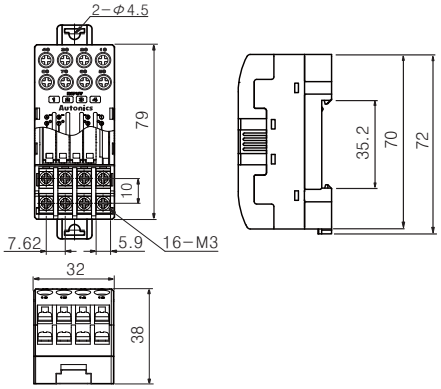

●ABS-H16PA-□N / ABS-H16TN-□N / ABS-H32PA-□N / ABS-H32TN-□N

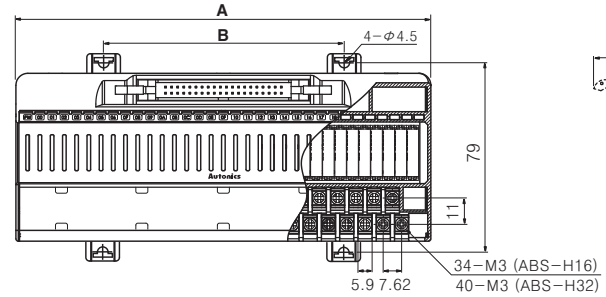

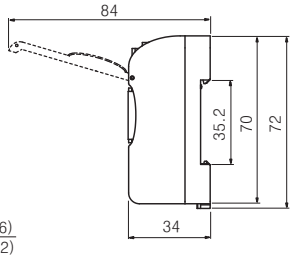

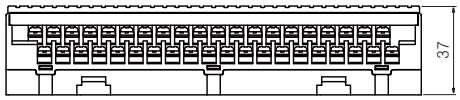

	ABS-H16 type	ABS-H32 type
A	140	173
B	70	100

Unit:mm

I/O cable(CJ Series)

▣Ordering information

CJ — HPFP 40 — V 1N 010 — 1A N L

Module connector direction	R	Right
	L	Left
	X	Right+Left
	Y	Left_Right
Connection type (terminal block part – PLC part)	N	+/– Forward
	P	+/– Reverse
Module detailed type	Number + Charactor	Signal terminal + Power terminal pin arrangement
Cable length	005	0.5m
	010	1.0m
	015	1.5m
	020	2.0m
Branch type	P	OPEN type
	1N	Non–branch type
	2S	Short 2–branch type(terminal)
	2L	Long 2–branch type(terminal)
	F2	Short up–down 2–branch type(PLC)
	Y2	Short right–left 2–branch type(PLC)
Connector direction at PLC part	V	Verical (¬)
	H	Horizontal(—)
The number of connector pin at PLC part	20	20pins
	37	37pins
	40	40pins
	50	50pins
Connector type (terminal block part – PLC part)	HPHP	Hirose Plug – Hirose Plug
	HPFP	Hirose Plug – Fujitsu Plug
	HPDP	Hirose Plug – D–sub Plug
	HPDS	Hirose Plug – D–sub Socket
	HPMP※1	Hirose Plug–3M Plug(one–touch)
	HPMQ※1	Hirose Plug–3M Plug(screw)
	HP	Open –Hirose Plug
	FP	Open –Fujitsu Plug
	DF	Open –D–sub Plug
	DS	Open –D–sub Socket
Type	CJ	Cable junction connection cable

▣Specifications

Model	CJ Series
Appearances	
PLC connector	HIF3BA–20D–2.54R, HIF3BA–40D–2.54R, D–SUB 37P/S, FCN–367J040–AU/F
Terminal block connector	HIF3BA–20D–2.54R, HIF3BA–40D–2.54R
Applicable cable	UL 20276 TWIST 40C, UL 20276 TWIST 20C
Conductor characteristic	7/0.127mm (AWG 28)×20P, 7/0.127mm (AWG 28)×10P
Insulation diameter	0.12mm²
Cable diameter	ϕ7.2mm(40C) / 8.9mm(50C)
Rated voltage	Max. 1A
Conductor resistance	Max. 0.223Ω/m
Insulation voltage	500VAC 50/60Hz for 1 minute
Insulation resistance	Min. 15MΩ/km

※Applicable cable color is black.
※Conductor resistance value is at 20℃.

Autonics
www.autonics.com

KONICS Products

Product Category

KONICS

- Recorders
- Indicators
- Converters
- Power Supply Units
- Thyristor Units
- Pressure Transmitters
- Temp. Transmitters

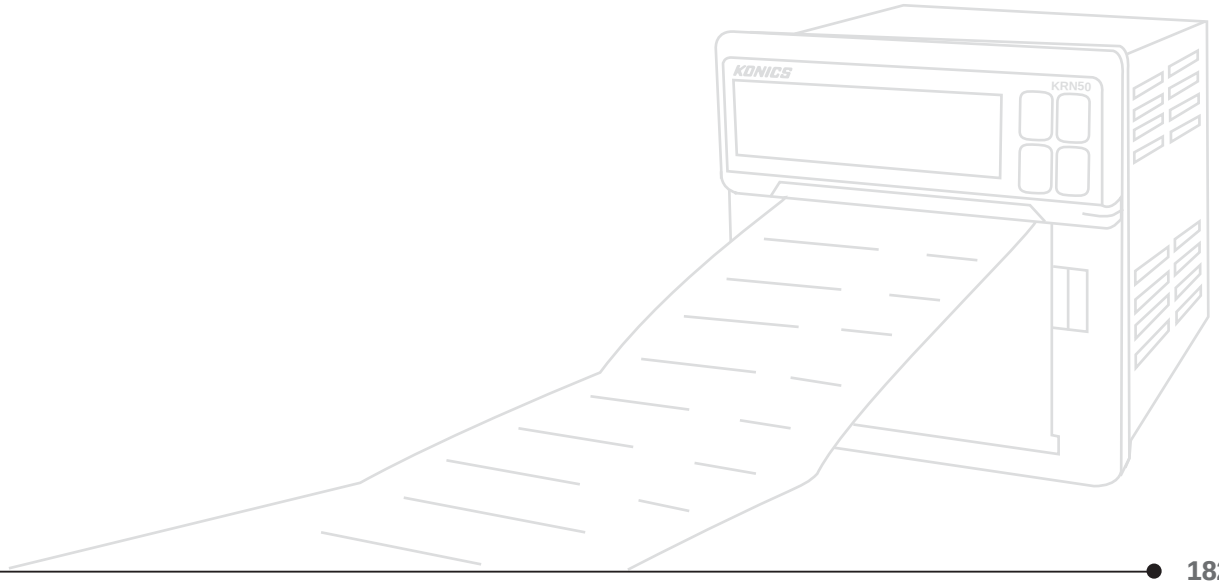

Creation of new technology toward customer satisfaction.

KONICS Co., Ltd,
is a leading manufacturer of Control & Measurement equipment in Korea, and its sister company Autonics is marketing its products into overseas market outside Korea.

Contents

Item	Model	Page
Recorders	KRN100 Series	184
	KRN50 Series	185
	KA-100 Series	186
Indicators	KN-1000B Series	187
	KN-2000W Series	188
Converters	CN-6000 Series	189
	KR Series	190
Power Supply Units	PS Series	191
Thyristor Units	DPU Series	192
Pressure Transmitters	TPS20 Series	193
	PTF30 Series	194
Temp. Transmitters	KT-502H Series	195

[W96×H96×L86.5mm]

100mm Hybrid Paper Type Recorder

KRN100 Series

KRN100 series,100mm hybrid paper type recorder, realizes paper and paperless type recorder, supporting recording function and backup both internal data memory and USB memory.

• Features

- Combines functions of paper recorder and paperless recorder
- Enables to print the saved data of inner memory when running out of recording paper (Data logger function)
- Inner data backup with USB memory
- Enables parameter setting & monitoring through USB, RS485, Ethernet communication
- High visibility and setting convenience by adopting graph LCD
- 25ms of high speed sampling, 240mm/h of high speed successive recording

Ordering codes

KRN100 - 12 0 0 0 - 1 1 - 0 S

Case	S	Standard pannel mounting type
Power supply	0	100-240VAC, 50/60Hz
Optional communication	0	None
	1	RS485/Ethernet/USB(KRN-COM × 1ea)
⑥ Power supply for transmitter	0	None
	1	3ea(KRN-24V3 ×1ea)
	2	6ea(KRN-24V3 × 2ea)
	3	9ea(KRN-24V3 × 3ea)
	4	12ea(KRN-24V3 × 4ea)
Alarm output (4CH RELAY-TYPE)	0	None
	1	4ea(KRN-AR4 × 1ea)
	2	8ea(KRN-AR4 × 2ea)
	3	12ea(KRN-AR4 X 3ea)
Alarm output (6CH TR-TYPE)	0	None
	1	6ea(KRN-AT6 × 1ea)
	2	12ea(KRN-AT6 × 2ea)
③ Digital input	0	None
	1	6ea(KRN-DI6 × 1ea)
	2	12ea(KRN-DI6 × 2ea)
② Input channel	04	4 channel(KRN-UI2 × 2ea)
	06	6 channel(KRN-UI2 × 3ea)
	08	8 channel(KRN-UI2 × 4ea)
	10	10 channel(KRN-UI2 × 5ea)
	12	12 channel(KRN-UI2 × 6ea)
Item/Series	KRN100	New Konics 100mm Paper Type Recorder

※ Note
1) Cards are connected up to 4ea from ③ Digital input to ⑥ Power supply for transmitter.
EX) 1. KRN-DI's max. number of slot : 2ea
2. KRN-AO's max. number of slot : Relay type 2ea, TR type 2ea
3. KRN-24V's max. number of slot : 4ea
2) Cards are connected up to 10ea from ② the number of channel to ⑥ Power supply for transmitter.

Dimensions

(Unit : mm)

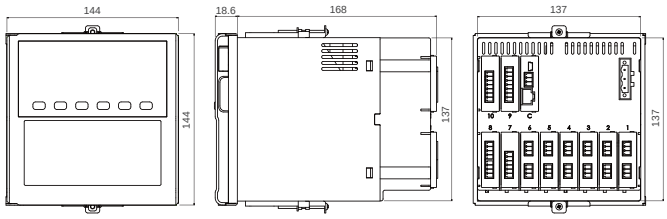

Specifications

Model		KRN100 Series
Power supply		100-240 VAC, 50/60Hz
Allowable voltage range		85-264VAC
Power consumption		Max. 55VA
Display		STN Graphic LCD (Resolution 320 X 120 Pixel)
Input channel		2 / 4 / 6 / 8 / 10 / 12channel(2channel/card) - Available to expend by user
Input (※1)	RTD	JPt100Ω, DPt100Ω, DPt50Ω, Cu100Ω, Cu50Ω, Supplying current 420μA
	T/C	B, C(W5), E, G, J, K, L, L(Russia), N, P, R, S, T, U
	Analog	Voltage : ±60mV, ±200mV, ±2V, 1-5V, ±5V, -1V to 10V Current : 0.00 to 20.00mA, 4.00 to 20.00mA
Input impedance		Voltage(V) : Min. 150kΩ, TC/RTD/Voltage(mV) : Min. 2MΩ, Current : 51Ω
Indicating accuracy (※2)	RTD T/C Analog	±0.1% F.S.±1digit (25℃±5℃) ±0.2% F.S.±1digit (-0℃±20℃, 30℃ to 50℃) But, RTD : 500 to 800℃ is PV value ±0.5% F.S. ±1digit, T/C : Below -100℃ is ±0.3% F.S. ±1digit
Digital input card		Non-contact input (ON:Residual voltage 1V max., OFF: Leakage current 0.1mA max.) Contact input(ON:1kΩ max., OFF:100kΩ min.), short circuit: Approx. 4mA
Alarm output card		Alarm relay output : 250VAC 3A, 30VDC 3A, 1 Form A(Resistive load) Alarm TR output : NPN open collector, 12-24VDC / 30mA Max.
Power output for transmitter		24 ±2VDC, total 3 channel, max. 30mA per 1channel built-in over-current protection circuit
Communication output	RS485	Modbus RTU ※Recommended to use shield cable over AWG 24
	USB	USB V2.0 Full Speed (Device control)
	EtherNet	IEEE802.3(U), 10/100 BASE-T(Modbus TCP)
Sampling period		1 to 4 channel : 25ms / 125ms / 250ms, 5 to 12 channel : 125ms / 250ms (Inner sampling period is operation unit time for average movement filter and alarm output function.) ※Max. sampling period for TC-R, U, S and T sensor is 50ms
Recording period in graph mode		10, 20, 40, 60, 120, 240mm/h
Storage period		1 to 3,600 sec.
Resolution		16 Bit
Memory		512MByte
Storage medium	USB memory	Purchase separately(Host Control)-On the side of the unit USB storage device can be recognized by mix. 32G, ex
Dielectric		2,500VAC 50/60Hz for 1 minute (power terminals and case) ※USB device and Ethernet are excepted
Isulation resistance		Min. 20MΩ(at 500VDC megger)
Noise strength		±2kV the square wave noise(pulse width 1μs) by the noise simulator
Ambient temperature		0 to 50℃(at non-freezing status)
Storage temperature		-20 to 60℃(at non-freezing status)
Ambient humidity		35 to 85%RH(at non-freezing status)
Unit weight		Approx. 1.7 to 2.0kg

(※1) To change input specification, you must turn OFF the power of KRN100, remove universal input card, set inner jumper pin and re-connect it.
(※2) Exception range for better accuracy by sensor(Accuracy after 30min warm-up time)
R, S, C, G : 0 ≤ T ≤ 100 ±4.0℃,
B : No regulation accuracy below 400℃,
T, U : -200 ≤ T ≤ -100 ±3.0℃, -100 ≤ T ≤ 400 ±2.0℃,
Cu50 : -200 ≤ T ≤ 200 ±1.0℃,
DPt : -200 ≤ T ≤ 500 ±1.5℃

[W96×H96×L86.5mm]

50mm Hybrid Small-sized thermal line Recorder

KRN50 Series

Thermal recorder KRN50 measures a various industrial input and prints records clearly to indicate. It is easier to operate character than existing products and it is small, light-weighted.

Features

- Compact and light -weighted
- Easy operation – LCD dot matrix display
- Channel multi input(TC/RTD/mV/V/mA) – individual select
- External digital input 2EA
- Alarm output(2EA/Channel)
- RS485 communication output(Modbus RTU)
- 2EA record mode - graphic mode or digital numeric mode
- Optional function – reservation record, detect a paper-end, record backup data, etc.

Ordering codes

KRN50 - 2 0 0 4 - 4 0

Power supply	0	100-240VAC, 50/60Hz
	1	12-24VDC(Option)
Option output	0	None
	4	RS485
Alarm output	0	None
	2	Alarm 2ea ※1
	4	Alarm 4ea ※2
Ch2 control output	0	None
Ch1 control output	0	None
The number of channel	1	1 channel
	2	2 channel
Item/Series	KRN50	KONICS Thermal Line Recorder(50mm)

※1. In case of selection of 2 channel model, it is able to use 2 alarm outputs by means of alarm output of ch1. Therefore it is not possible that Ch1 has 1 alarm and Ch2 has 1 alarm separately.

※2. It is able to be selected in case of only 2 channel model.

Connections

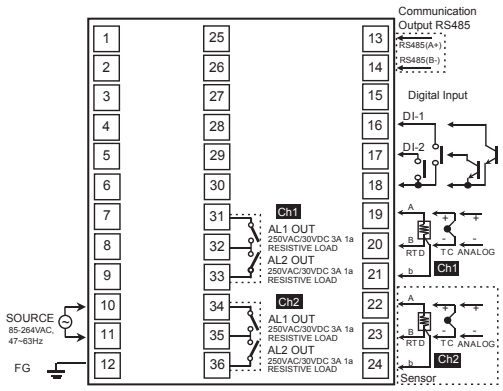

Specifications

Model		KRN50 Series
Power supply		100-240VAC, 50/60Hz
Power consumption		Max. 34VA
Display		LCD Dot matrix Display (Resolution 128 X 32 Dot)
Input	RTD	JPt100Ω, DPt100Ω, DPt50Ω, Cu100Ω, Cu50Ω, Supplying current 420㎂
	T/C	K, J, E, T, B, R, S, N, C, G, L, U, PLII
	Analog	Voltage : -50.0 to 50.0mV, -199.0 to 200.0mV, -1.000 to 1.000V, -1.00 to 10.00V Current : 0.00 to 20.00mA, 4.00 to 20.00mA F class (1%) 50Ω high-accuracy resistor outside must be connected in case of current input
Event input	contact input	ON : Max. 1kΩ OFF : Min. 100kΩ
	Non-contact input	Input ON : Remaining voltage Max. 1V OFF : Leakage current Max. 0.05mA
		Short circuit : Approx. 0.3mA
Indicating accuracy	RTD T/C Analog	±0.2% F.S. ±1digit(25±5℃), ±0.3% F.S. ±1digit(0 to 20℃, 30 to 50℃) ※But, under -100℃ in T/C, ±0.4% F.S. ±1digit
Recording accuracy		±0.5% F.S.
Recording	Speed	30, 60, 120, 240, 480, 960(mm/hour)
	Cycle	Graphic mode : 10min., 15min., 30min., 1hour, 2hour, 3hour, 4hour, 8hour, 16hour, 24hour / Digital mode : 5sec. to 99min. 59sec.)
Recording paper		KONICS KRN50 exclusive recording paper (16M/volume)
Alarm output		Relay contacting point capacity 250VAC/30VDC 3A 1a(Resistive load)
Alarm hysteresis		Set ON/OFF interval : within 1 to 999digit
Communication output		RS485 (Protocol : Modbus RTU)
Setting method		Set by key
Sampling period		500ms/channel X 2 channels = 1000ms
Internal voltage		2,000VAC 50/60Hz for a minute (Rechargeable terminal of another polarity)
Internal vibration		0.75mm amplitude at frequency of 10 to 55Hz in each of X, Y, Z directions for 2 hours
Life of relay		Electrical Contact Rating 10 x 10^4 operations minimum
Isolation resistance		Min. 100MΩ (at 500VDC Megger)
Noise strength		±2kV the square wave noise(Pulse width : 1㎲) by the noise simulator
Ambient temperature		0 to 50℃(at non-freezing status)
Storage temperature		-20 to 60℃(at non-freezing status)
Ambient humidity		35 to 85%RH(at non-freezing status)
Terminal bolt		M3 screw type terminal
Unit weight		Approx. 700g

Dimensions

(Unit : mm)

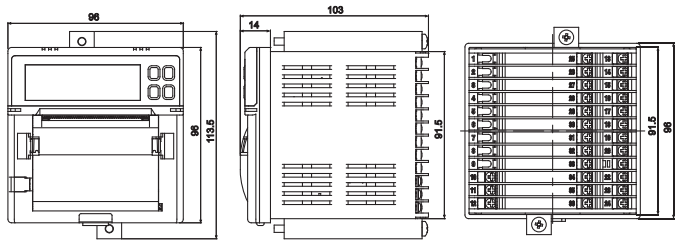

[W144×H144×L235mm]

100mm Analog Recorder

KA-100 Series

KA-100 recorder is a panel mount typed electric self-balancing recorder with compact, light-weighted and easy operation. (DIN standard size)

Features

- 3 channel input/recording in 100mm
- Pen color – RED, GREEN, BLUE
- High recording speed – 10 ~ 1280mm/h
- 6EA alarm output(2EA/channel) – Each Hi/Low Alarm
- Various input(TC, RTD, mV, V, mA)

Ordering codes

KA-100 | 1 | K08 | A | 3

Alarm Option	1	1Pen Hi/Low Alarm
	2	2Pen Hi/Low Alarm
	3	3Pen Hi/Low Alarm
Power Supply	A	110/220VAC, 50/60Hz
	Z	Other
Input Type/Range	A	4-20mA
	F	0-20mA
	G	0-10mV
	H	0-100mV
	I	0-1V
	L	0-5V
	M	1-5V
	R□	01:0~1400, 02:0~1600, 08:800~1600
	S□	01:0~1400, 02:0~1600
	B□	11:500~1800, 12:600~1800
	K□	03:0~400, 05:0~600, 06:0~800, 08:0~1200
	E□	01:0~150, 02:0~300
	J□	03:0~200, 06:0~400, 09:0~800
	T□	02:0~200, 03:0~300, 15:50~150
	X□	05:0~2000, 06:0~2300
	P□	00:0~50, 01:0~100, 03:0~150, 04:0~200, 06:0~300, 07:0~400, 41:-50~50, 42:-50~100
	Z	Other
Type	1	1Pen
	2	2Pen
	3	3Pen
Item/Series	KA-100	100mm Analog Recorder

Connections

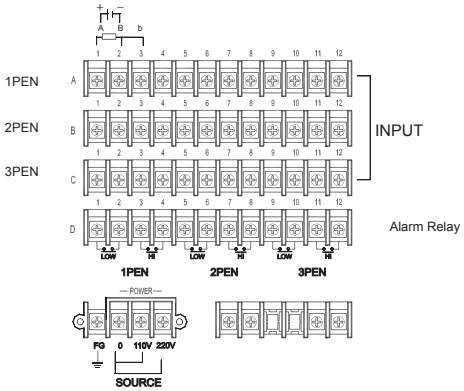

Specifications

Model		KA-100 Series
Power supply		110/220VAC, 50/60Hz
Power consumptions		1pen – Approx. 6VA, 2pen – Approx. 9VA, 3pen – Approx. 15VA
Input	Direct current	4-20mA, 0-20mA(Load resistance 250Ω)
	Direct voltage	Over 10mV, within 10V
	Thermocouple	R, S, B, K, E, J, T, Wre 5-26
	RTD	PT 100Ω, within 0 to 50℃
Accuracy	Indicating	Within ±0.5% of Full Scale(23±2℃, 55±10%RH)
	Recording	Within 0.3%
Recording	Source	3 kinds of 1, 2, 3 pen
	Pen	1pen-RED, 2pen-GREEN, 3pen-BLUE
	Type	Automatic balance type consecutive pen recording 1, 2, 3 pen specification
	Speed	10, 20, 40, 80, 160, 320, 640, 1280mm/h
	Paper	Valid recording width – 100mm, Full length – 9M × 2, Folding pitch 40mm
Alarm (Option)		1, 2, 3 pen : Each Hi/Low Setting accuracy : Max. ±0.5% Contacting point capacity : 1A/110VAC(Resistance load)
Ambient temperature		0 to 50℃
Storage temperature		-30 to 70℃
Ambient Humidity		35 to 85% RH
Storage Humidity		30~90% RH
Insulation resistance		Measuring terminal – Between grounding terminals over 250VDC 50MΩ Power source terminal – Between grounding terminals over 500VDC 100Ω
Static voltage		Measuring terminal – Between grounding terminals, AC 1kV for 1 minute Power source terminal – Between grounding terminals, AC 1500V for 1minute
External dimension		W144 × H144 × L235mm
Mounting method		Panel mounting type (Panel cut : 138×138mm)
Weight		1pen-Approx 3.0kg, 2pen- Approx 3.3kg, 3pen- Approx 3.8kg
Temperature/humidity drift		Within ±0.3% 10 deg /±0.1% F.S
Input resistance		Over 1MΩ
Allowable signal source resistance		Direct voltage … Under 10kΩ Thermocouple … Under 10kΩ(No burn out) Under 200Ω(Bure out) RTD … Under 10Ω per one line
Removal rate of common mode		140dB (CMRR)
Removal rate of normal mode		50dB (NMRR)
Balance time		Within full scale 1 sec.

Dimensions

(Unit : mm)

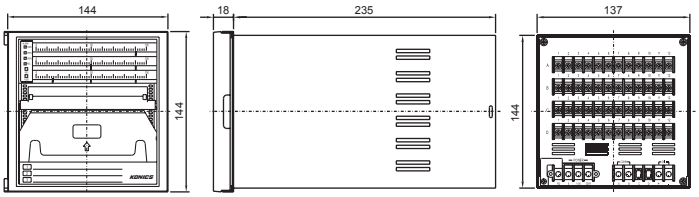

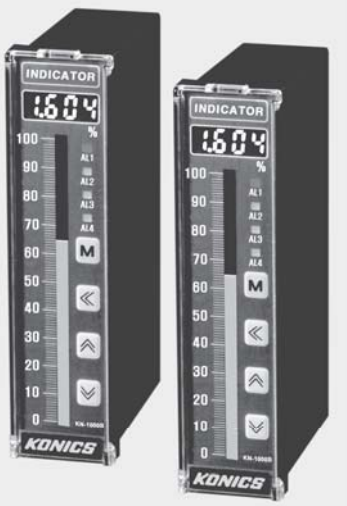

[W36×H144×L70mm]

Bargraph Digital Indicator

KN-1000B Series

Bar graphic digital indicator KN-1000B series makes possible easier signal recognition with wider & clearer bargraph indication and various & advanced functions.

Features

- Multi input signal(TC, RTD, mV, V, mA)
- Internal 2 or 4 point alarm output
- Modbus RTU protocol by RS485 communication
- 4~20mA transmission output(Isolated output)
- Peak-Hold function : Memorize/indicate the highest value
- Burn-Out function & sensor compensation function
- Convenient digital input function
  (Alarm ON/OFF, Hold PV, Zero adjustment)
- Internal sensor power supply(24VDC)
- Compact size

Ordering codes

KN-1 0 0 0 B

Size(mm)	B	DIN W36×H144mm
Power supply	0	100-240VAC, 50/60Hz
	1	24VDC(Option)
Option output	0	None
	1	Output(4-20mA)
	4	RS485 communication
Alarm output	0	None
	2	Alarm 2ea
	4	Alarm 4ea
Item/Series	KN-1	Bar Graphic Digital Indicator

Specifications

Model		KN-1000B Series
Power supply		100-240VAC, 50/60Hz
Allowable voltage range		±10% of Power supply
Power consumption		Approx. 6VA
Display		Number : 7Segment LED Display(Red), Bar : 101ea(Green)
Input	TC	K, J, E, T, B, R, S, N, C, L, U, PLII
	RTD	Cu50Ω, Cu100Ω, JPt 100Ω, DPt 50Ω, DPt 100Ω
	Analog	Voltage : -50.0 to 50.0mV,-199.9 to 200.0mV,-1.000 to 1.000V,-1.00 to 10.00V Current : 0.00 to 20.00mA, 4.00 to 20.00mA
Digital input		Free input selection by 3 function (Alarm ON/OFF, Hold-indicated value, zero adjustment)
Auxiliary output	Alarm output	2 point : Relay contacting point capacity 250VAC 3A 1c 4 point : Relay contacting point capacity 250VAC 1A 1a
	Transmission output	Isolated 4-20mA(PV transmission), Less 600Ω resistance load
	Communication output	RS485(Protocol : Modbus RTU)
Indicating accuracy		±0.2% F.S. ±1digit(25 ±5℃), ±0.3% F.S. ±1digit (-10 to 20℃, 30 to 50℃) ※But, Under - 100℃ in TC, ±0.4% F.S. ±1digit /※TC-T, TC-U are at Min, ±2.0℃
Setting method		Set by Key
Alarm hysteresis		Set ON/OFF interval : within 999digit
Input sampling period		100ms(Analog input), 250ms(Temperature input)
Function		Alarm, Self-Diagnosis, Peak-Storage, Digital input, Hold, Input special function, Input compensation, Indication scaling, Output scaling
Internal voltage		200VAC 50/60Hz during a minute(Between input terminal and power terminal)
Internal vibration		0.75mm amplitude at frequency of 5 to 55Hz in each of X, Y, Z directions for 2 hours
Life of relay	2 point	Mechanic-Over 10 million times, Electronics-Over 100,000 times (250VAC 3A Resistive load)
	4 point	Mechanic-Over 20 million times, Electronics-Over 500,000 times (250VAC 1A Resistive load)
Isolation Resistance		Over 100MΩ(at 500VDC megger)
Noise strength		±2kV the square wave noise(pulse width : 1㎲) by the noise simulator
Memory retention		About 10 years(when using non-volatile memory semiconductor)
Ambient temperature		-10 to 50℃(at non-freezing status)
Storage temperature		-20 to 60℃(at non-freezing status)
Ambient humidity		35 to 85%RH(at non-freezing status)
Unit weight		Approx. 200g

Connections

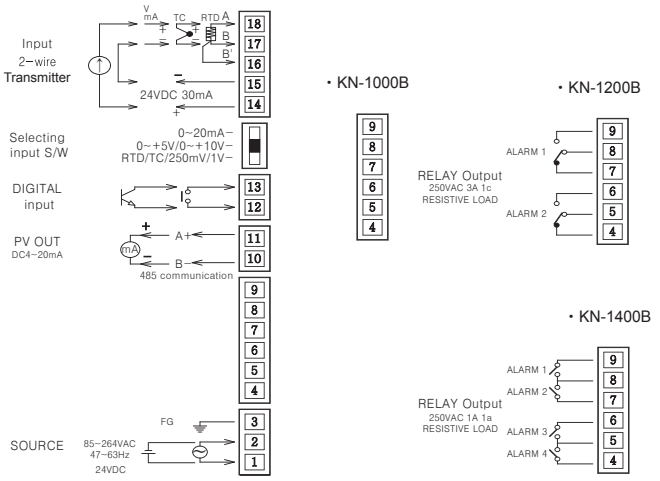

Dimensions

(Unit : mm)

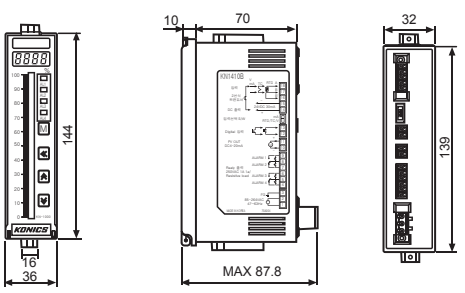

[W96×H48×L80mm]

Multi Indicator

KN-2000W Series

Multi indicator KN-2000W series provides better visual indication with bigger & clearer color changeable LED display.
Its diverse & advanced functions guarantee more productive and reliable solutions.

Features

- Clearer display by adopting 3-color LED
- Multi input signal(TC, RTD, mV, V, mA)
- Internal 2 or 4 point alarm output
- Modbus RTU protocol by RS485 communication
- 4~20mA transmission output(Isolated output)
- Peak-Hold function : Memorize/indicate the highest value
- Burn-Out function & sensor compensation function
- Convenient digital input function
  (Alarm ON/OFF, Hold PV, Zero adjustment)
- Internal sensor power supply(24VDC)
- Full option model
  (2 or 4 point alarm+RS 485 communication output+transmission output)

Ordering codes

KN-2 0 0 0 W

Size(mm)	W	DIN W96×H48
Power Supply	0	100-240VAC, 50/60Hz
	1	24VDC
Option output	0	None
	1	Output(4-20mA)
	4	RS485 communication
	5	Output(4-20mA)+RS485 communication
Alarm output	0	None
	2	Alarm 2ea
	4	Alarm 4ea
Item/Series	KN-2	Multi Indicator

Specifications

Model		KN-2000W Series
Power supply		100-240VAC, 50/60Hz / 24VDC
Power consumption		Approx. 8VA
Input	TC	K, J, E, T, B, R, S, N, C, L, U, PLII
	RTD	Cu50Ω,Cu100Ω, JPt 100Ω, DPt 50Ω, DPt 100Ω
	Analog	Voltage : -50.0 to 50.0mV,-199.9 to 200.0mV,-1.000 to 1.000V,-1.00 to 10.00V Current : 0.00 to 20.00mA, 4.00 to 20.00mA
Digital input		Free input selection by 3 function(Alarm ON/OFF, Hold-indicated value, zero adjustment)
Auxiliary output	Alarm output	2 point : Relay contacting point capacity 250VAC 3A 1c 4 point : Relay contacting point capacity 250VAC 1A 1a
	Transmission output	Isolated 4-20mA(PV transmission), Less 600Ω resistance load
	Communication output	RS485(Protocol : Modbus RTU)
Indicating accuracy		±0.2% F.S. ±1digit(25±5℃), ±0.3% F.S. ±1digit (-10 to 20℃, 30 to 50℃) ※ But, Under - 100˚ in TC, ±0.4% F.S. ±1digit /※ TC-T, TC-U are at Min. ±2.0℃
Setting method		Set by Key
Alarm hysteresis		Set ON/OFF interval : within 999digit
Input sampling period		100ms(Analog input), 250ms(Temperature input)
Function		Alarm, Self-Diagnosis, Peak-Storage, Digital input, Hold, Input special function, Input compensation, Indication scaling, Output scaling
Internal voltage		200VAC 50/60Hz during a minute(Between input terminal and power terminal)
Internal vibration		0.75mm amplitude at frequency of 5 to 55Hz in each of X, Y, Z directions for 2 hours
Life of relay	2 point	Mechanic-Over 10 million times, Electronics-Over 100,000 times(250VAC 3A Resistive load)
	4 point	Mechanic-Over 20 million times, Electronics-Over 500,000 times(250VAC 1A Resistive load)
Isolation Resistance		Over 100MΩ(at 500VDC megger)
Noise strength		±2kV the square wave noise(pulse width : 1㎲) by the noise simulator
Memory retention		About 10 years(when using non-volatile memory semiconductor)
Ambient temperature		-10 to 50℃(at non-freezing status)
Storage temperature		-20 to 60℃(at non-freezing status)
Ambient humidity		35 to 85%RH(at non-freezing status)
Unit weight		Approx. 200g

Connections

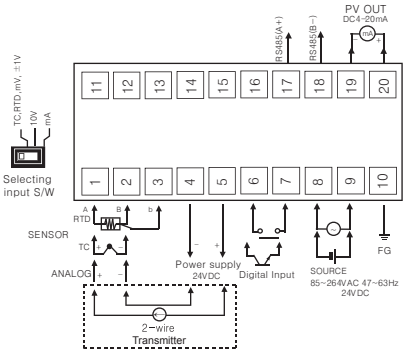

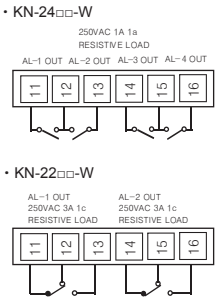

Dimensions

(Unit : mm)

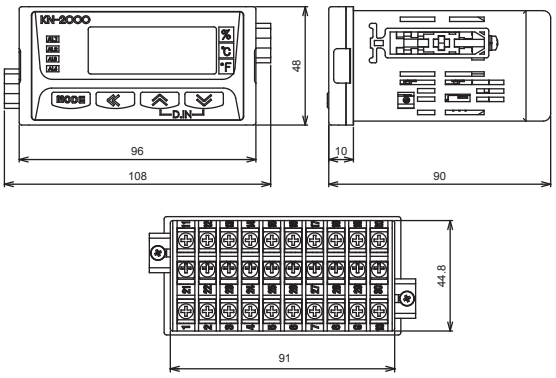

Power Supply Units

[W50×H80×L100mm]

Isolated Converter

CN-6000 Series

Isolated converter CN-6000 series guarantees the best performance with high reliability. 3-color-display provides optimal visibility at any environments. (Color can be customizable)

Features

- Clearer display by adopting 3-color LED
- Multi input(TC/RTD/mV/mA), pulse input
- Excellent display by adoption of negative LCD (Selection of 3 different colors)
- Indicating output scale by bar graph
- Indicating the input signal type and unit conversion
- A wide variety of output type (Current, Voltage, Alarm)
- Isolated independent AO(Analog output) for channel 1&2 (0~10V, 0~20mA)
- Input and output scale setting function
- Input offset and slope compensation function
- Peak hold function
- Internal sensor power supply (24VDC)

Ordering codes

CN - 6 1 0 0 - C1

Transmission output	C1	Current 1ea
	C2	Current 2ea
	V1	Voltage 1ea
	V2	Voltage 2ea
	R1	Alarm 1ea
	R2	Alarm 2ea
	R4	Alarm 4ea
Power Supply	0	100-240VAC, 50/60Hz
	1	24VDC
Input	10	Universal input
	40	Pulse input
Item/Series	CN-6	Isolated Converter

Specifications

Model		CN-6000 Series
Power supply		100-240VAC, 50/60Hz / 24VDC
Power consumption		Approx. 8VA
Display		12 Segment, 4 low LCD display (Conversion of RED, GREEN, YELLOW colors) Graphic bar & Input/Unit display (RED)
Character size		W:6.4mm×H:11.0mm(12 Segment)/W:1.4mm×H:2.75mm(Unit)
Input	TC	K, J, E, T, B, R, S, N, C, L, U, PLII
	RTD	Cu50Ω, Cu100Ω, JPt 100Ω, DPt 50Ω, DPt 100Ω
	Analog	Voltage : -50.0 to 50.0mV,-199.9 to 200.0mV,-1.000 to 1.000V,-1.00 to 10.00V Current : 0.00 to 20.00mA, 4.00 to 20.00mA
Output	Current	0-20mA (Contacting the range of output), Load resistance Max.600Ω
	Voltage	0-10VDC (Contacting the range of output), Load resistance Min.10KΩ
	Alarm	1 point : Relay contacting point capacity 250VAC 1A 1a 2 point : Relay contacting point capacity 250VAC 3A 1c 4 point : Relay contacting point capacity 250VAC 1A 1a
Indicating accuracy		±0.2% F.S. ±1digit(25±5□), ±0.3% F.S. ±1digit (10 to 20℃, 30 to 50℃) ※But, Under - 100˚ in TC, ±0.4% F.S. ±1digit / ※ TC-T, TC-U are at Min. ±2.0℃
Setting method		Set by Key
Input sampling period		100ms(Analog input), 250ms(Temperature input)
Function		Alarm, Peak-hold, Digital input(Front key), Lock, Input special unit, Input scale, User compensation, Display scale, Output range, Input scale, Input & Output upper/lower expansion, Digital filter, Input special function, Changing color for display/switching, Burn out, Digital input, Hold
Internal voltage		200VAC 50/60Hz during a minute(Between input terminal and power terminal)
Internal vibration		0.75mm amplitude at frequency of 5 to 55Hz in each of X, Y, Z directions for 2 hours
Isolation Resistance		Over 100MΩ(at 500VDC megger)
Noise strength		±2kV the square wave noise(pulse width : 1㎲) by the noise simulator
Memory retention		About 10 years(when using non-volatile memory semiconductor)
Ambient temperature		-10 to 50℃(at non-freezing status)
Storage temperature		-20 to 60℃(at non-freezing status)
Ambient humidity		35 to 85%RH(at non-freezing status)
Weight		Approx. 200g

Connections

※ 8pin

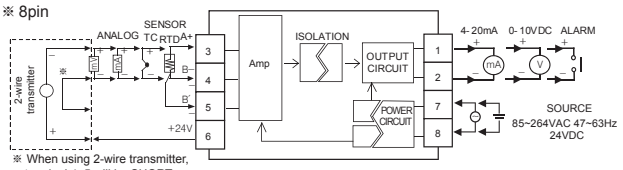

※ When using 2-wire transmitter, terminal 4, 5 will be SHORT.

※ 8pin

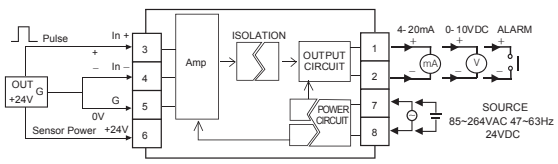

※ 11pin

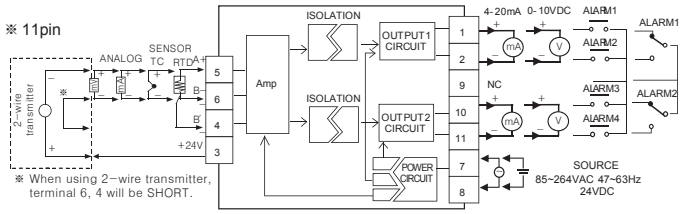

※ When using 2-wire transmitter, terminal 6, 4 will be SHORT.

※ 11pin

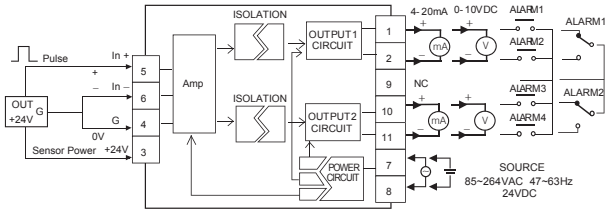

[W24×H99.5×L26.9mm]

Surge Arrester

KR Series

KR series, surge arrester, protects equipment from the damaging effect of overvoltage and surge current caused by lightning. KR series adopts anti-superheating & surge absorbing parts and GDT complied with CE/UL approval, realizing stability with high-performance.

• Features

- Realizing stability with high-performance elements complied with CE/UL approval.
  - Adopting anti-superheating & surge absorbing and GDT
- Diverse model for various mounting environment
  - Power supply type(AC, DC), Signal type(Themocouple, Voltage, Current, RTD, Potentiometer, Pulse, Differential)
- Space saving design with compact size (W24 X H72 X L56.9mm)
- Easy maintenance with detachable structure
- IEC standard structure
  - Power supply type : IEC 61643-1, Signal type : IEC 61643-21

Ordering codes

KR P3A – 250 – 05

Current capacity		05	5kA
Power supply	Power supply type	12	12VDC
		24	24VDC
		48	48VDC
		125	125VAC
		250	250VAC
	Signal type	5	5V
		24	24V
Input signal	Power supply type	P3A	3-wire AC
		P3D	3-wire DC
	Signal type	T	Themocouple, Voltage, Current
		D	RTD, Potentiometer(VR), Pulse, Differential(RS485)
Item/Series		KR	KONICS Arrester

Dimensions

(Unit : mm)

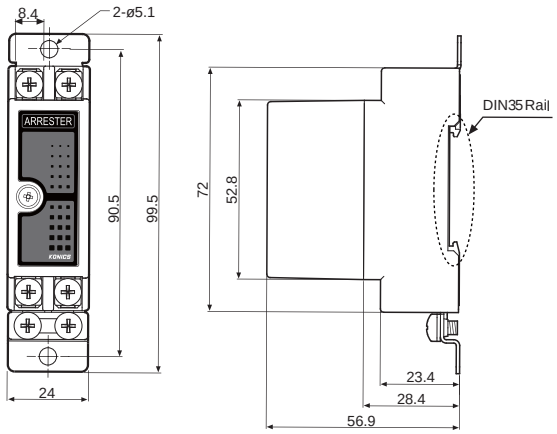

Specifications

1. Power supply type

Model		KRP3D-12-05	KRP3D-24-05	KRP3D-48-05	KRP3A-125-05	KRP3A-250-05
Input signal		3-wire DC(DC+, DC-, F.G.)			3-wire AC(Line, Neutral, F.G.)	
Power supply		12VDC	24VDC	48VDC	125VAC	250VAC
Discharge voltage ※1	L–L ※2	17V	35V	65V	200VDC	390VDC
	L–G ※3	170V			390VDC	
Protection level ※4 (Up@10kV)	L–L	40V	60V	110V	600V	1100V
	L–G	500V			1000V	1500V
Maximum load current		2A			5A	
Leakage current ※5	L–L	• 0.1mA(12V)	• 0.1mA(24V)	• 0.1mA(48V)	• 0.1mA(140VAC)	• 0.1mA(270VAC)
	L–G	• 0.1mA(100V)			• 0.1mA(270VAC)	
Surge capacity		5kA				
Respond time		100nS(0.1usec.)				
Series resistance		0.2Ω ±1.0%		0.4Ω ±1.0%	–	
Ambient temperature		-20 to 70℃(at non-freezing status)				
Ambient humidity		50 to 90%RH(at non-freezing status)				
Approval		IEC 61643-1 Class III				
Unit weight		Approx. 100g				
Mount		Wall mounting, DIN Rail				

※1: Discharge voltage- Voltage staring surge discharge
※2: L-L Voltage between line and line
※3: L-G Voltage between line and ground
※4: Protection level - Maximum voltage gauge when surge voltage is applied
※5: Leakage current- Permissible leakage current

2. Signal type

Model		KRT-5-05	KRD-5-05	KRD-24-05
Input signal		TC, Voltage, Current	RTD, Potentiometer(VR), Pulse, Differential(RS485)	
Power supply		5V	5V	24V
Discharge voltage	L–L	10V	10V	35V
	L–G	170V	70-110V	
Protection level (Up@10kV)	L–L	30V	40V	100V
	L–G	230V	230V	
Maximum load current		100mA	100mA	
Leakage current	L–L	• 10μA(5V)	• 10μA(5V)	• 10μA(24V)
	L–G	• 50μA(100V)	• 50μA(50V)	
Surge capacity		5kA		
Respond time		1nS		
Series resistance		10Ω ± 0.1%, 20ppm/℃		
Ambient temperature		-20 to 70℃(at non-freezing status)		
Ambient humidity		50 to 90%RH(at non-freezing status)		
Approval		IEC 61643-21 Category C1, C2		
Unit weight		Approx.100g		
Mount		Wall mounting, DIN Rail		

Power Supply Units

[W50×H80×L100mm]

Power Supply Unit

PS Series

The isolation power supply unit PS series provides stabilized DC power for pressure, flow, and level.

- Features
  - Compact size & light weight
  - Parallel operation of power supply units available
  - DIN rail mounting type
  - Dual output

Ordering codes

PS - 2 2 1

Output	1	Single output(150mA)
	2	Dual output(150mA, 50mA)
Output Voltage	1	12VDC
	2	24VDC
Power supply	1	110VAC
	2	220VAC
Item/Series	PS	Power Supply Unit

Specifications

Model			PS Series
Power supply			110/220VAC, 50/60Hz
Output	Voltage		12VDC
			24VDC
	Current	Single	150mA
		Dual	150mA, 50mA
Accuracy			±0.5% of span
Repeatability			±0.3V of span
Response time			Less than 0.5 sec
Insulation resistance			More than 100MΩ(at 500VDC megger)
Ambient temperature			-10 to 50℃
Ambient humidity			Less than 85% RH

Connections

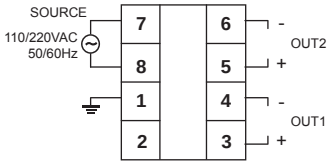

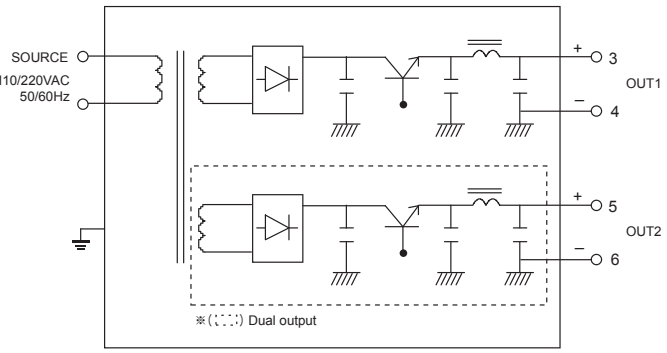

Dimensions

(Unit : mm)

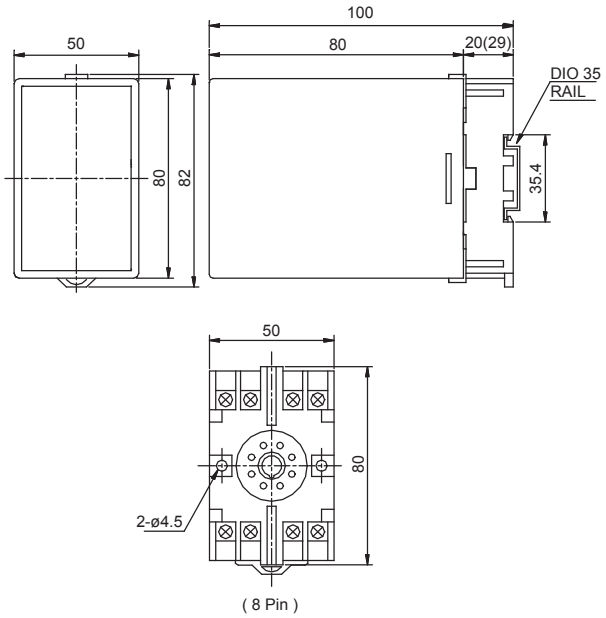

Thyristor Units

Type	1 Phase	3 Phase
A	W97 ×H260×L170mm	W140×H306×L201mm
B	W140×H280×L174mm	W213×H365×L217mm
C	W213×H338×L179mm	W278×H450×L227mm
D	W278×H422×L212mm	W408×H558×L261mm

Digital Power Thyristor Unit

DPU Series

DPU series realizes user's optimal convenience by increasing stability of SCR Unit and removing noise of electrical furnace.

• Features

- Precise feedback(static current, static voltage, static power) by measuring RMS
- Adoption of phase control and zero-crossing cycle control (fixed cycle, variable cycle) for various load
- Multi input for control input signal(current, voltage, potentionmeter, etc)
- Includes customized 6 digital inputs(Event input)
- Various alarm output including current error, heater disconnection etc
- Indicating various setup, input/output by 7 segment and BAR LED
- MODBUS RTU protocol by RS485 communication

Ordering codes

DPU 1 2 A – 025 R

Option	R	RS485		
	D	Remote Display Unit		
	A	Remote Display Unit + RS485		
	N	None		
Rating current capacity (A)	025	25A	200	200A
	040	40A	250	250A
	050	50A	350	350A
	070	70A	400	400A
	080	80A	500	500A
	100	100A	600	600A
	120	120A	750	750A
	150	150A	950	950A
	180	180A		
Size	Type	1 phase	3 phase	
	A	0 to 70A	0 to 50A	
	B	80 to 180A	70 to 200A	
	C	200 to 350A	250 to 350A	
	D	400 to 600A	400 to 600A	
	E	Option	Option	
Power voltage	Type	1 phase	3 phase	
	1	110VAC	110/220VAC	
	2	220VAC	380/440/VAC	
	3	380VAC	–	
	4	440VAC	–	
The number of phase	1	1 phase		
	3	3 phase		
Series	DPU	Digital Power Thyristor Unit		

Specifications

Model	DPU1 Series	DPU3 series
The number of phase	1 phase	3 phase
Power voltage	110VAC/220VAC/380VAC/440VAC (The extra power supply for fan operation is unnecessary)	
Allowable voltage range	±10% of rating voltage	
Rating frequency	50/60Hz(Automatic recognition), Allowable frequency range:±2Hz(performance is guaranteed as ±1Hz)	
Size	Refer to Dimension diagram	
Min. load current	1A	
Output range	Phase control : 0 to 98%, ZC control : 0 to 100%	
Control type	• Phase control : NORMAL control(NON-FEEDBACK), Static voltage/Static current/ Static power control (FEED BACK) • CYCLE control(ZC) : fixed cycle control, variable cycle control • ON/OFF Control(ZC)	
Load	Phase control : Resistance load, Inductive load ON/OFF, CYCLE control : Resistance load	
Power consumption	Under 7VA (Except for power supply for fan operation)	
Indicating type	• Display the indicating value and setting value : 7 segment 4 row, Display the status : 4 LED • Display the percentage of the indicating value : 11 LED BAR	• Display the indicating value and setting value : 7 segment 4 row, Display the status : 6 LED • Display the percentage of the indicating value : 11 LED BAR
Output accuracy	• Static voltage feedback control : within ±3.0% F.S. of rating voltage (within ±10% F.S. fluctuation of rating voltage) • Static current feedback control : within ±3.0% F.S. of rating voltage (within 1 to 10 times fluctuation of load resistance) • Static power feedback control : within ±3.0% F.S. of rating voltage (within ±10%F.S. fluctuation of rating voltage and within ±3.0% F.S. of rating voltage(within 1 to 10 times fluctuation of load resistance) • NORMAL control : within ±10% F.S. of rating voltage	
Setting method	Set by key or communication	
Control input	• AUTO : DC4-20mA/DC0-20mA/0-5VDC/1-5VDC/0-10VDC/voltage pulse(0-12VDC)/ None of voltage input/communication input(RS485) • MAN : internal 10kΩ VR, external 3 to 10kΩ VR(over 2W)	
Digital input (DI)	AUTO/MAN conversion, RUN/STOP conversion, RESET, Holding output, designate SP(SP1~6)	
Indicating type	Control input, power frequency, load voltage, load current, load power, load resistance	
Min. indicating output	Over 2.5% of rated voltage/current	
Main function	SOFT START(100 sec.), SLOW UP/DOWN(100 sec.), output High/Low limit, current limit, starting limit, BASE-UP	
Alarm function	Over-current alarm, current alarm, over-voltage alarm, fuse disconnection alarm, abnormal heatsink alarm, abnormal element alarm, heater disconnection alarm	
Other functions	Selecting the indicating content on display, selecting the indicating content on bar graph, indicating FULL load, lock function, user-correction function(ZERO/slope), selecting the indicating direction of load resistance	
Optional function	RS485(Protocol : Modbus RTU)	
Dielectric strength	200VAC 50/60Hz for 1 minute (between input terminal and power terminal)	
Vibration resistance	0.75mm amplitude at frequency of 5 to 55Hz in each of X,Y,Z directions for 2 hours	
Isolation resistance	Min. 200MΩ(at 500VDC megger)	
Noise strength	±2kV the square wave noise (pulse width:1㎲) by the noise simulator	
Ambient temperature	-10 to 50°C(at non-freezing status)	
Storage temperature	-20 to 80°C(at non-freezing status)	
Ambient humidity	5 to 90% RH(at non-freezing status)	
Unit weight	A Type : 2.7kg, B Type : 5.5kg, C Type : 11kg, D Type : 15.5kg	A Type : 6.5kg, B Type : 11.5kg, C Type : 20kg

Connections

DPU1 Series(1 Phase)

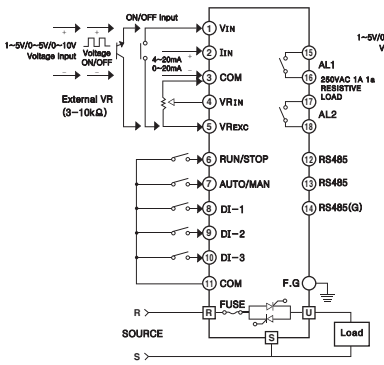

DPU3 Series(3 Phase)

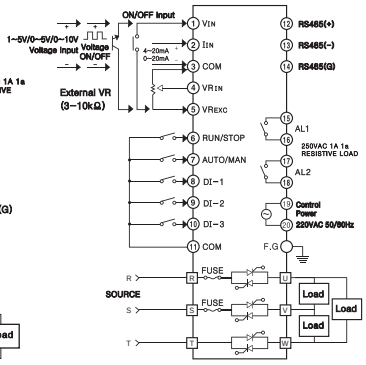

Pressure Transmitters

High-Reliability Pressure Transmitter

TPS20 Series

CE

TPS20 Series(electric pressure transmitter) adopts stainless steel diaphragm for pressure part. It enables to measure up to 0.2~350 kgf/cm² with high accuracy and reliability.

• Features

- For measuring pneumatic, hydraulic and oil pressure measuring
- A variety of model according to field application
  - Head type
  - Din connector type
  - Connector cable type (I type, L type)
- Stainless steel diaphragm adopted for the characteristics of temperature
- 4~20mA transmission output by 2-wire

Ordering codes

TPS20 | G | 3 | A | F8 | 5L

Option (Connector cable)	00	None
	2I	"I" type 2M
	2L	"L" type 2M
	5I	"I" type 5M
	5L	"L" type 5M
Process connection	F8	PT 3/8"(Standard)
	ZZ	Others

Range				
	1	0 to 0.2kgf/cm²	C	0 to 200kgf/cm²
	2	0 to 0.5kgf/cm²	F	0 to 300kgf/cm²
	3	* 0 to 1kgf/cm²	H	0 to 350kgf/cm²
	4	* 0 to 2kgf/cm²	M	-760mmHg to 0kgf/cm²
	5	*0 to 5kgf/cm²	O	-760mmHg to 1kgf/cm²
	6	* 0 to 10kgf/cm²	Q	-760mmHg to 5kgf/cm²
	7	* 0 to 20kgf/cm²	V	-760mmHg to 10kgf/cm²
	8	* 0 to 30kgf/cm²	X	-760mmHg to 20kgf/cm²
	9	0 to 50kgf/cm²	Y	-760mmHg to 30kgf/cm²
	A	0 to 100kgf/cm²	Z	Others

" * " mark is possible for absolute pressure

Connector type	1	Head type
	2	Din connector type
	3	Connector cable type
Pressure type	G	Gauge pressure
	A	Absolute pressure
Item/Series	TPS20	High-Reliability Pressure Transmitter

※ It is available for connector type 3 connector cable type

Specifications

Measuring range	-760mmHg~0 to 30 kgf/㎠ A (Compound pressure) 0~0.2 to 350 kgf/㎠ G (Gauge pressure) 0~1.0 to 30 kgf/㎠ Abs (Absolute pressure)	
Allowable over pressure	300% of max. Span	
Electric characteristic	Power supply	15-35VDC
	Output	4-20mA DC
	Load resistance	600Ω Max
	Consumption power	0.5W
	F.S. ±0.3%(Linearity, Hysteresis, Repeatability)	
Accuracy	Linearity	F.S. ±0.3% -10 to 50℃ : F.S. ±0.3% 50 to 70℃ : F.S. ±0.5%(except for -10 to 50℃)
	Hysteresis	F.S. ±0.3%
Using temp. / Humidity	-10 to 70℃, 5 to 95%RH	
Temperature Characteristic	Zero	F.S. ±0.03%
	Span	F.S. ±0.03%(25℃ STD.)
Response time	Less 100ms	
Connection	PF 3/8(STD.)	
Material	Element	Diaphragm : SUS 316
		Sealing : SUS 316
	Case	O-ring : Fluorine rubber Connection : SUS316
Range	Refer to range table	
Case protection	Weatherproof	
Unit weight	Approx. 320g (Head type STD.)	

Connections

• Head type

• DIN connector type

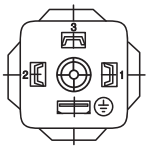

1 : +
2 : −
⏚ : F.G

• Connector cable type

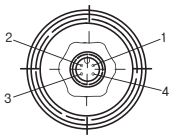

1 : +
3 : Ground
4 : −

• External connections

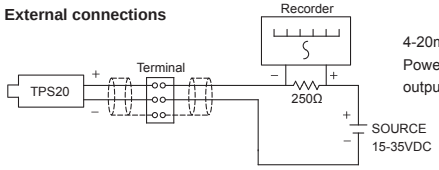

4-20mA
Power 24VDC load 600Ω
output 4-20mA 2wire

Dimensions

(Unit : mm)

* Above connection is standard type (PF 3/8).

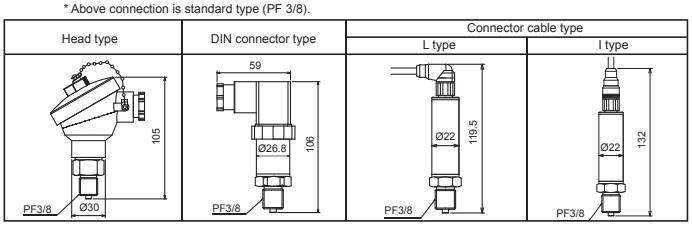

Smart Pressure Transmitter

PTF30 Series

CE

The PTF30 pressure transmitter using high performance A/D converter and microprocessor has sensor adjustment function. Its pressure sensor minimizes the effect of temperation changes in fields.
The series with explosion proof structure enables to measure within the range of 0.0~350kgf/cm². Also its transmitter has explosion proof structure.

• Features

- Power supply 4~20mA, 2-wire type
- Displaying the result value by using the various sub-function such as scaling, sensor adjustment, setting filters.
- Continuously rotatable display (330°)
- Explosion proof structure

Ordering codes

PTF30 - G 6 N N - F8 (0 to 7 kgf/cm²)

Process connection	(□)	User range
	F8	PF3/8"(Standard)
Mounting bracket	N	None
	B	With bracket
HART Communication	N	None
Range "*"mark is possible for absolute pressure	1	* 0 000 to 0.350kgf/cm²
	2	* 0.000 to 1.000kgf/cm²
	3	* 0.000 to 2.000kgf/cm²
	4	* 0.000 to 7.000kgf/cm²
	5	* 0.00 to 20.00kgf/cm²
	6	* 0.00 to 35.00kgf/cm²
	7	* 0.00 to 70.00kgf/cm²
	8	* 0.0 to 200.0kgf/cm²
	9	* 0.0 to 350.0kgf/cm²
	A	-257mmHg to 0.00kgf/cm²
	C	-760mmHg to 0.00kgf/cm²
	F	-760mmHg to 2.00kgf/cm²
	H	-760mmHg to 7.00kgf/cm²
	M	-760mmHg to 20.00kgf/cm²
	O	-760mmHg to 35.00kgf/cm²
Pressure type	G	Gauge pressure
	A	Absolute pressure
Item/Series	PTF30	High-Reliability Pressure Transmitter

Specifications

Model	PTF30 Series
Power supply	15-35VDC
Dlsplay	12 Segment, LCD display (Graphic bar)
Character Size	W:6.24mm X H:10.73mm(12 Segment) W:1.45mm X H:2.54mm(Unit)
Output	DC4-20mA(2-wire) Min limit : 3.6mA, Max limit : 21.6mA
Indicating accuracy	SPAN<10% of URL : (±0.05 + 0.01 · URL/SPAN)% of SPAN SPAN≥10% of URL : ±0.2% of SPAN
Ambient temperature effects	±(0.075% X URL + 0.15% X SPAN) ····20ºC
Setting method	Set by key
Input sampling period	300ms
Function	Peak-hold, Digital input(Front key), Two unit function User compensation, Display scale, Input scale Digital filter, Lock.
Internal voltage	1000VAC 50/60Hz during a minute
Internal vibration	0.75mm Amplitude at frequency of 5 to 55Hz in each of directions of 2hours
Isolation resistance	Over 100MΩ (500VDC Mega STD)
Noise strength	±240V the square wave noise(pulse width : 1μs) by the noise simulator simulator
Memory retention	Avbout 10 years(when using non-voltile memory semiconductor)
Ambient temperature	-20 to 70ºC(at non-freezing status)
Storage temperature	-20 to 80ºC(at non-freezing status)
Ambient humidity	0 to 85% RH(at non-freezing status)
Case materials	Main body : Aluminum(A1Dc.8S), Cover O-Ring : Buna N
Unit weight	Approx.1.2kg
EX-Protection	Ex d IIC T6

※ SPAN : User Range
※ URL : Upper Range Limit

Connections

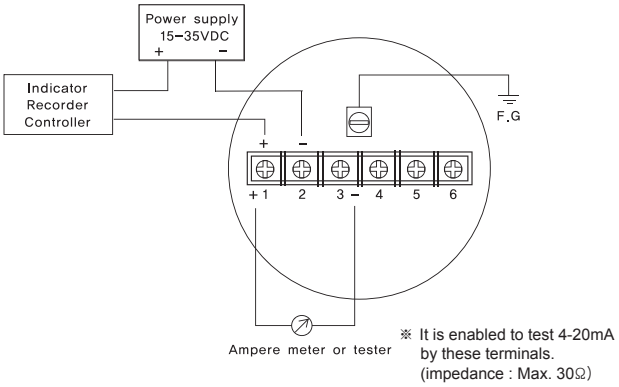

Dimensions

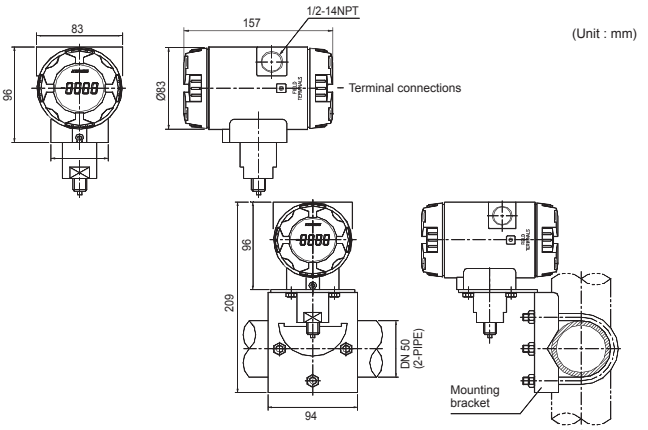

HART-Protocol Temperature Transmitter

KT-502H Series

The KT-502H is smart type temperature transmitter with multi range input. Both remote control using a Hart protocol and universal range input are available.

Features

- SMART temperature transmitter KT-502H for resistance temperature detector (RTD), thermocouples(TC), resistance and voltage transmitters, settable via HART-protocol, for temperature field transmitter and universal application
- Blacklight LCD screen in crease the visibility in the darkness
- Continuously rotatable display(330˚) for ease of reading
- HART protocol
- Explosion proof structure
- Be able to cambine temp. sensor manufactured by user's design
- User's customized temperature sensor can be combined.

Ordering codes

KT-502H **1**

Output	0	None
	1	With bracket
Item/Series	KT-502H	HART-Protocol Temperature Transmitter

Connections

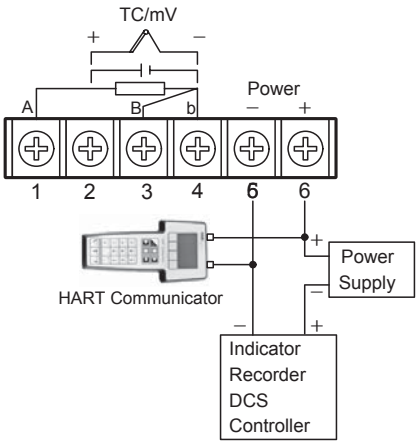

Specifications

Model			KT-502H Series
Power supply			7.5-45VDC (without display)/10.5-45VDC (with display)
Input	Resistance temperature detector (RTD)		Pt100, Pt500, Pt1000, Cu50, Cu100, *Ni100, *Ni500, *Ni1000
	Resistance transmitter	Resistance(Ω)	0 to 400Ω Min.meas.Ranges 10Ω 0 to 2000Ω Min.meas.Ranges 20Ω 0 to 10000Ω Min.meas.Ranges 100Ω
			*a = 5000ppm/K or 6180ppm/K Connection type : 2-, 3- or 4-wire connection/Sensor current : 0.5 mA
	Thermocouples(TC)		B, E, J, K, N, R, S, T
	Voltage transmitters (mV)	Millivolt transmitters (mV)	-10 to 75mV -100 to 100mV -100 to 500mV -100 to 2000mV
Output	Signal		4-20mA
	Signal on alarm		Under ranging - Linear drop to 3.8mA
			Over ranging - Linear rise to 20.8mA
			Sensor break: sensor open-circuit 3.8mA
	Load		Max.(Vpower supply-7.5V)/0.0208A Max.(Vpower supply-10.5V)/0.0208A
	Linearisation/transmission behaviour		Visible range 32.5X22.5mm; 5digit 7-segment voltage linear
	Galvanic isolation		U=2 KV AC (input/output)
Display type			Visible range 32.5X22.5mm; 5-digit 7-segment main display, digit height 8mm, 8-digit 14 segment additional display, digit height 5mm; 52 bars meter with 2% resolution
Display range			-19999 to 99999
Materials			Housing : ABS
Unit weight			Approx. 1.8kg (with display)
Response time			1 s
Reference operating conditions			Calibration temperature: 23ºC (73.4ºF) ± 5K
Long term stability			< 0.05%/year
Switch on delay			< 5s
Influence of ambient / Load influence Power supply influence			Negligible
Self stabilty configuration			0 to 2%
Filter configurating			0 to 160㎲
Resolution			0.3㎲

Measurement accuracy	Type	Measurement accuracy
Resistance thermometer (RTD)	Pt100, Ni100	0.2K or 0.08%
	Pt500, Ni500	0.5K or 0.20%
	Pt1000, Ni1000	0.3K or 0.12%
	Cu50	0.2K or 0.08%
	Cu100	0.3K or 0.12%
Thermocouple (TC)	K, J, T, E	typ.0.5K or 0.08%
	N	typ.1.0K or 0.08%
	S, B, R	typ.2.0K or 0.08%
Resistance transmitter(Ω)	0 to 400Ω	±0.1Ω or 0.08%
	0 to 2000Ω	±1.5Ω or 0.12%
	0 to 10000Ω	±7.5Ω or 0.20%
Voltage transmitters (mV)	-10 to 75mV	±20㎶ or 0.08%
	-100 to 100mV	±20㎶ or 0.08%
	-100 to 500mV	±30㎶ or 0.08%
	-100 to 2000mV	±50㎶ or 0.08%
Ambient temperature	-40 to 85ºC (-40~185ºF) Without display -20 to 70ºC (-4~158ºF) With display	
Storage temperature	-40 to 100ºC (-40 to 212ºF)	
Condensation	Allowable	
Degree of protection	IP 65	

Autonics Corp.

Established in 1977, Autonics is a leading company of sensors & controllers in Korea and the No.1 exporting company as well, its world class products over 6,000 items are marketed in more than 100 countries worldwide to satisfy customer needs in various fields of Industrial Automation.

Dreaming *ORANGE* World, Autonics

Autonics is stepping forward to the global leader in IA industry.

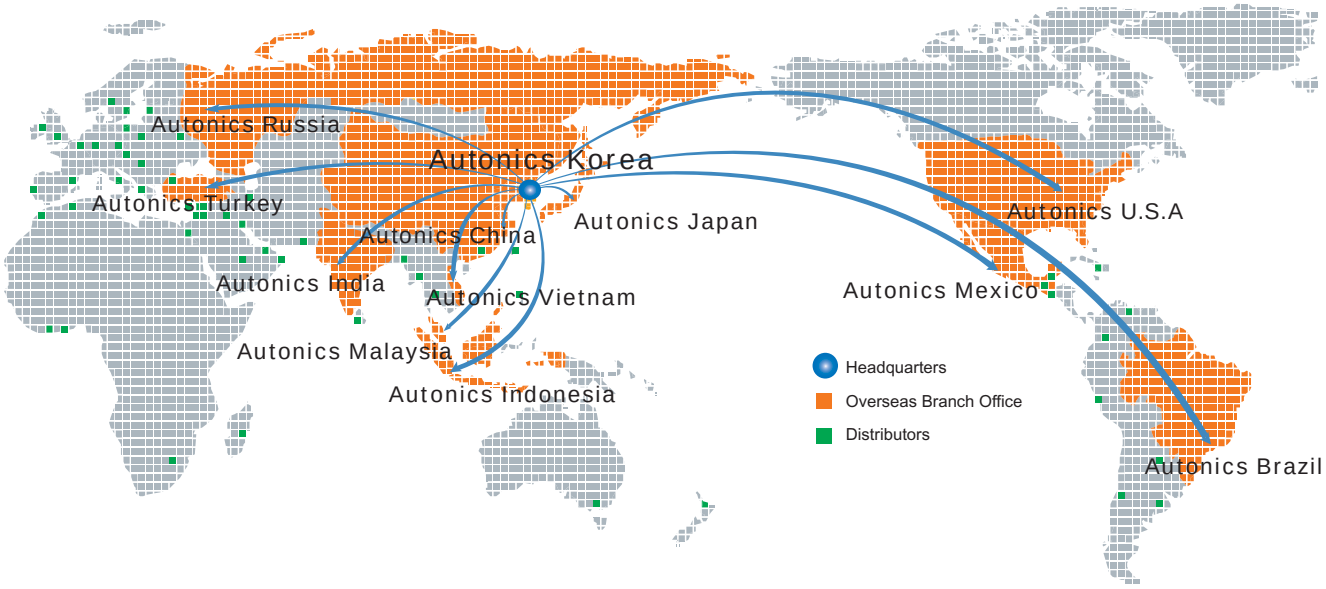

Orange Solution by **Autonics**

Orange is the corporate color of Autonics, and also implies unique IA solution offered by Autonics.
Autonics ORANGE solution is a New and Advanced, Reliable and Economical sensing and control equipment offering the Optimized IA solution to the customers around the world.

Autonics
Sensors & Controllers

www.autonics.com

Distributor

■ **Major products**

Photoelectric sensors • Fiber optic sensors • Door/Door side sensors • Area sensors • Proximity sensors • Pressure sensors • Rotary encoders • Temperature controllers • Temperature/Humidity transducers • Power controllers • Counters • Timers • Panel meters • Tachometer/Pulse(Rate) meters • Display units • Sensor controllers • Switching power supplies • Control switch/Lamps/Buzzers/Sockets • I/O terminal block/Cable • 2/5-phase stepping motors/drivers • Motion controllers • Graphic/Logic panels • Field network devices • Serial converter modules Laser marking systems(Fiber, CO_2, Nd:YAG) • Laser welding/soldering systems

Headquarters
41-5, Yongdang-dong, Yangsan-si, Gyeongnam, 626-847, Korea

Overseas Business Dept.
402-303, Bucheon Techno Park, 193, Yakdae-dong, Wonmi-gu, Bucheon-si, Gyeonggi-do, 420-734, Korea
Tel: 82-32-610-2730/ Fax: 82-32-329-0728 / E-mail: sales@autonics.com

■ **Brazil** Autonics do Brasil Comercial Importadora Exportadora Ltda
Tel : 55-11-2307-8480 / Fax: 55-11-2309-7784 / E-mail: vendas@autonics.com.br

■ **China** Autonics electronic(Jiaxing) Corporation
Tel: 86-573-8216-1900 / Fax: 86-573-8216-1917 / E-mail: china@autonics.com

■ **India** Autonics Automation India Pvt. Ltd.
Tel : 91-22-2781-4305 / Fax : 91-22-2781-4518 / E-mail: india@autonics.com

■ **Indonesia** PT. Autonics Indonesia
Tel: 62-21-658 66 740 / Fax: 62-21-658 66 741 / E-mail: indonesia@autonics.com

■ **Japan** Autonics Japan Corporation
Tel: 81-3-6404-8191 / Fax: 81-3-6404-8193 / E-mail: support@autonicsjp.co.jp

■ **Malaysia** Mal-Autonics Sensor Sdn. Bhd.
Tel : 60-3-7805-7190(Hunting) / Fax : 60-3-7805-7193 / E-mail: malaysia@autonics.com

■ **Mexico** Autonics Mexico Sales Office
Tel : 52-55-5207-0019 / Fax : 52-55-1663-0712 / E-mail: ventas@autonics.com

■ **Russia** Autonics Corp. Russia Representative Office
Tel/Fax : 7-495-660-10-88 / E-mail : russia@autonics.com

■ **Turkey** Autonics Otomasyon Ticaret Ltd. Sti.
Tel : 90-216-365-9117 / Fax : 90-216-365-9112 / E-mail : info@autonics.com.tr

■ **USA** Autonics USA, Inc.
Tel: 1-847-680-8160 / Fax: 1-847-680-8155 / E-mail: sales@autonicsusa.net

■ **Vietnam** Autonics Vietnam Representative Office
Tel : 84-8-3771-2662 / Fax: 84-8-3771-2663 / E-mail: vietnam@autonics.com

Dimensions or specifications on this catalogue might be changed without prior notice.

NO.20120821-ENG-13